HOPPE®
Handle of excellence.



Export Catalogue

For all HOPPE door and window handles ...



Contents

HOPPE®
Handle of excellence.

General information
Product innovations, new models and series, explanation of symbols, organisation of the catalogue, layout of tables, product ranges and price-positioning page 4 **1**

Programme for interior doors


Interior door handles page 9 **2**


Interior door handles – Antiqua page 183 **3**


HCS® – HOPPE Compact System page 205 **4**


Programme for sliding doors page 237 **5**

Programme for entrance doors


Pull handles page 257 **6**


Complementary products page 283 **7**


Accessoires page 291 **8**


Presentations Systems page 301 **9**


Appendix page 311 **10**

New models and product series, product innovations


Bremen


Los Angeles


Window handle with adjustable spindle

Page

New models

Alta (E1433) 164
Bremen (1505) 77
Detroit (1644, E1644) 91
Lecce (1405) 99
Ibiza (1171) 172
Rotterdam (E1401) 127
Seattle (168L) 179
Sliding door sets 250

New product series

Baden (E1388) 165
Dallas (1643, E1643) 85
Dublin (1124) 169
Essen (E1555) 171
Los Angeles (M1642) 101
Maribor (1766) 173
Ravenna (M1788) 188
Utrecht (E1444) 180

Product innovation

Further details about the **window handle with adjustable spindle** can be found in our manual: **HOPPE – Handle of excellence. Basic information.**



How to use this catalogue

With the help of the information below, you will see how the catalogue is organised.

1. According to product groups:
On the first level, the catalogue is organised according to the product groups suitable for the various applications.


Interior door handles


HCS®


Sliding door sets


Pull handles ...

The complementary products, accessoires and presentation systems are following (see also index on p. 3).

2. According to product lines:
On the second level the catalogue is classified into the three product lines based on technology, visual appearance, service and price.


dura**vert**® product line


dura**plus**® product line


dura**norm**® product line

3. According to series names:
Subsequently, the products are listed alphabetically by series name. Products not belonging to any series at all are shown after the series, for example pull handles, security sets and knobs or pads on backplate etc.


Acapulco


Athinai

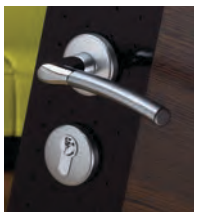
Bergen


Capri ...

4. According to materials:
If a series is available in several materials, then the material will be listed in the following order: aluminium, stainless steel, nylon and brass. For example, the Verona series comes in three materials, aluminium, stainless steel and brass.


Verona in **aluminium**

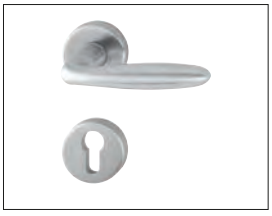
Verona in **stainless steel**


Verona in **brass**

General information

Symbol key:

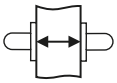

Door thickness
(in mm)



Spindle size
(in mm)



Fire-resistant door set
(For further details please refer to our manual: HOPPE – Handle of excellence. Basic information.)

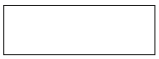

Core range
(for further information see p. 8)



Service range
(for further information see p. 8)

How are the tables set out?

Explanation using the example of a page with a brass interior door set from the dura**plus**® product line:

Series names
The series name is determined by the design of the handle, regardless of material. So, for example, all products used in conjunction with a particular handle have the same name, whether the material of the handle be aluminium, stainless steel or brass.
The names themselves are well-known towns or islands, the spelling of which is determined by the language of the appropriate country.

Design number
The design number serves as a further subdivision and search criterion. In the case of interior doors, the first number stands for the handle and the second for the backplate (or the rose). The letter in front of the number shows the material (in this example M for Messing, which is brass in English. Remember there is no letter in the case of aluminium). With security hardware, the design number always begins with the number of the knob.

Specification
This text briefly outlines the area of application of the product. The specification texts always refer to the product version shown (in this example a handle set).

Product illustration
With interior door sets, a door handle half set is always shown.
With security sets, a knob (pad) / handle set is always shown.

HOPPE special attribute
Here those products are highlighted that come with a special HOPPE technology feature. (For further details please refer to our manual: HOPPE – Handle of excellence. Basic information manual.)

Description
This column lists the various types of products available in this design (with this handle shape and this backplate).
As the tables of the interior door sets section always describe a handle set, you find a picture of a privacy set and a knob or pad / handle set as an example on page 7.

Door thickness
The exact door thickness is given in mm in this column. (For further details please refer to our manual: HOPPE – Handle of excellence. Basic information.)

Technical drawing
The technical drawing always refers to the product version shown in the picture and described by the specifcation text.

Product lines
This is where the product line dura**vert**®, dura**plus**® or dura**norm**® is indicated. (For further details please refer to our manual: HOPPE – Handle of excellence. Basic information.)

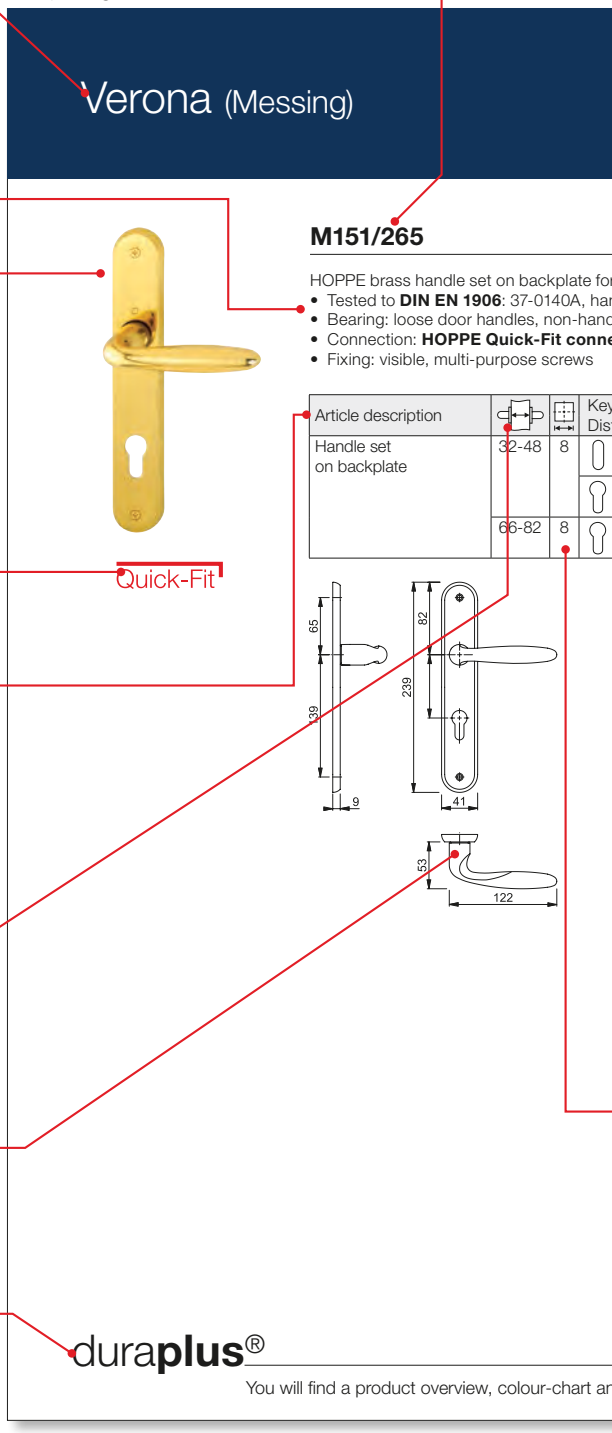

Examples

Privacy door

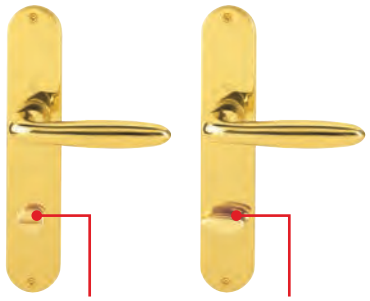

On the exterior: emergeny release (SK)

On the interior: turn (OL)

Knob(pad)/handle set

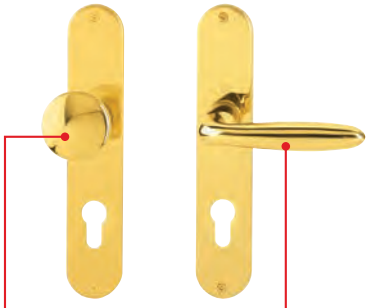

On the exterior with knob (pad)

On the interior with handle

You can find out more about knob(pad)/handle sets in our manual: HOPPE – Handle of excellence. Basic information.

Finish
The finish is given by the HOPPE finish key. The letter **R** in the finish code means the handle comes with the Resista® surface guarantee. (For further details please refer to our manual: HOPPE – Handle of excellence. Basic information.)

Item number
The item number written in **bolt** always refers to the product version shown and described.

Core range
The white fields in the table indicate products of the core range (for further information see p. 8).

Service range
The red-shaded fields indicate products of the service range (for further information see p. 8).

Packing unit
This shows how many products are packed into one folding box.

Outer cartons
This column shows how many products are packed into an outer carton (transport packaging).

Text below chart
This text gives additional information about the set as well as cross-reference to products.

Keyhole/distance
Keyhole type and distance are given here. (For further details please refer to our manual: HOPPE – Handle of excellence. Basic information.)

Spindle size
The exact size of the spindle used in the handle (or in the turn button of a privacy set) is given here in mm. (For further details please refer to our manual: HOPPE – Handle of excellence. Basic information.)

Footer text
Indicates three important sections

r interior doors:
ndle set for commercial applications
ded spring cassettes, maintenance-free slide bearing
ection with HOPPE solid spindle (spindle-receiver-components)

vhole/ tance	F71 Article no.	F77-R Article no.			P.U.	O.C.
90	2828717	2828768			1	10
85	**2828725**	2828784			1	10
85	2828741	2828792			1	10

The Resista® guarantee applies to all finishes with the letter **R** in the finish key.

Resista®

d the product range features at the back of the catalogue.

General information

Product ranges

and price-positioning

Delivery times
(from date of order until dispatch from HOPPE)

and pack-units

Core range

Gross prices
less rebate

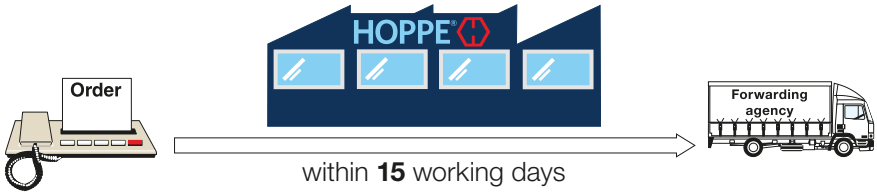

Transport packaging
(outer carton)



Service range

Gross prices
less rebate
(**NB**: different rebate
from core range)

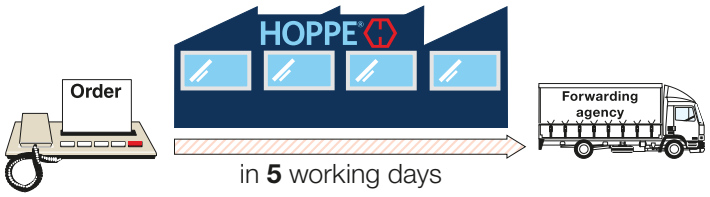



Inner box

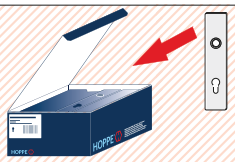

Opened pack
(additional costs of **2,50 €** net)

Please note here the respective markings in the product tables.

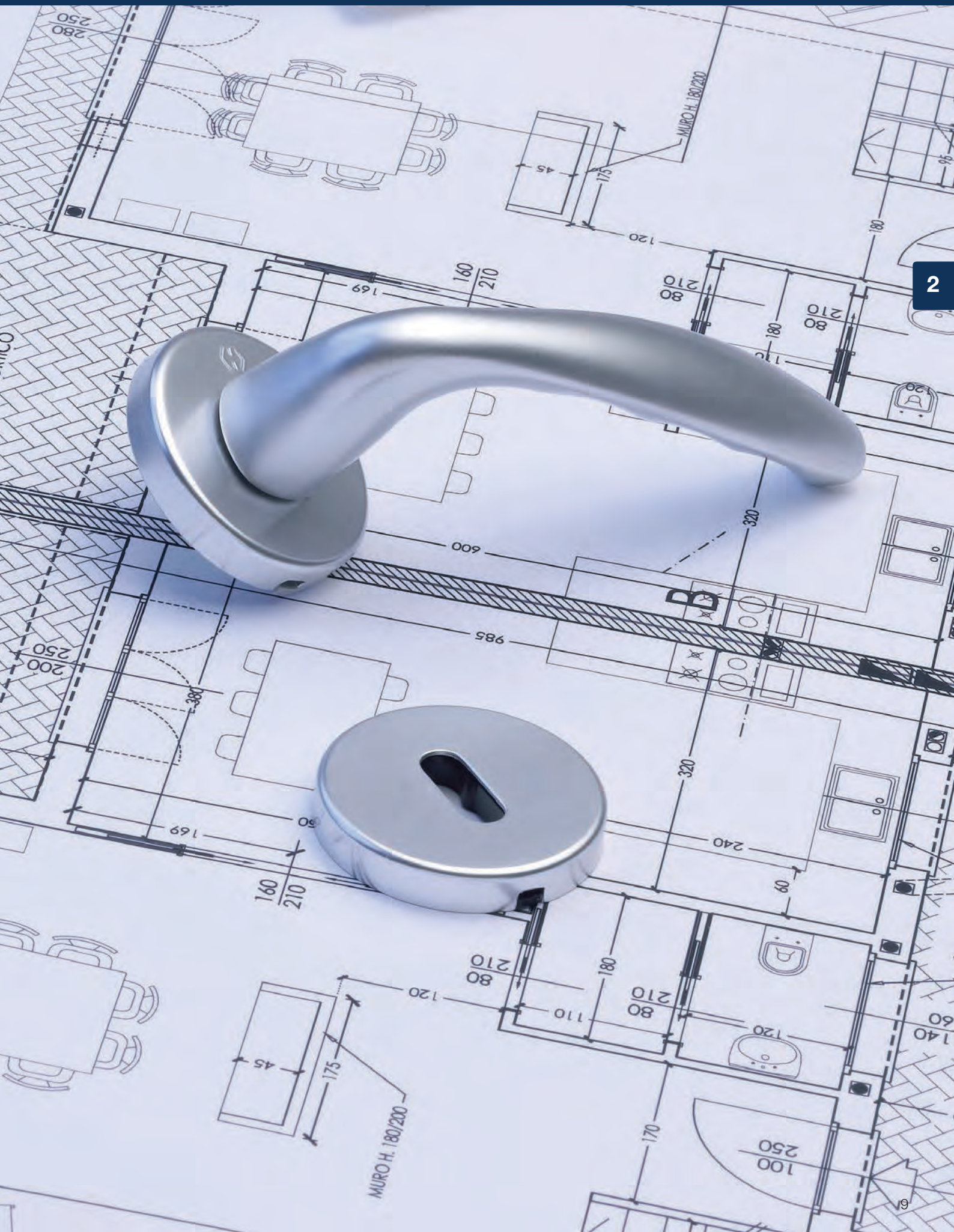

Overview interior door handles



The dura**vert**® product line

for the discerning



Acapulco
M1558
page 16



Athinai
M156
page 20



Bergen
M1602
page 24



Brisbane
1670
page 28

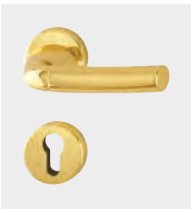

Bruxelles
M129
page 32



Capri
M1950
page 36



Genova
M1535
page 40



Las Vegas
E1440
page 46



Melbourne
1672
page 50



Monte Carlo
M1550
page 54



= Aluminium = Stainless steel = Brass



The duraplus® product line

more than usual



Amsterdam
(E)1400
page 63



Antwerpen
E1420
page 67



Atlanta
(M)1530
page 69



Bonn
E150
page 75



Bremen
1505
New
page 77

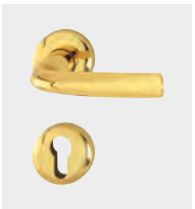

Cannes
M1545
page 79



Dallas
(E/M)1643
page 85



Detroit
(E)1644
New
page 91



Houston
M1623
page 95



Lecce
1405
New
page 99



Los Angeles
M1642
New
page 101

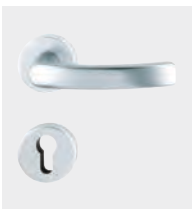

Luxembourg
199
page 105



Marseille
(E)1138
page 107



New York
1810
page 113



Paris
(E)138
page 119

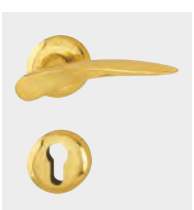

Ródos
M1603
page 125



Rotterdam
E1401
New
page 127



Stockholm
(E)1140
page 129

Overview interior door handles



Tôkyô
1710
page 135



Trondheim
E1430
page 137



Vancouver
139
page 141



Verona
1510,
E1800,
M151
page 143

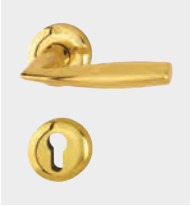

Vitória
(M)1515
page 149



Knobs
page 155



= Aluminium = Stainless steel = Brass



The duranorm® product line

consistently good value



Alta
E1433
New
page 164



Baden
E1388
New
page 165



Birmingham
1117
page 166



Cadiz
1767
page 167



Dubayy
1107
page 168



Dublin
1124
New
page 169



Essen
E1555
New
page 171



Ibiza
1171
New
page 172

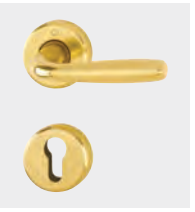

Maribor
1766
New
page 173

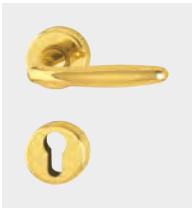

Roissy
M1941
page 175

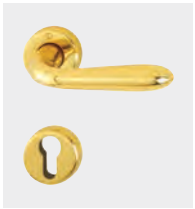

Santiago
M1740
page 177



Seattle
168L
New
page 179



Utrecht
E1444
New
page 180

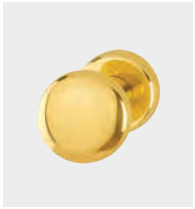

Knob, french door pull handle
page 181

Interior door handles





for the discerning duravert®

Acapulco



An unusual handle as multifaceted as the Mexican town it’s named after.



Acapulco (Brass)





Quick-Fit

M1558/18K/18KS

HOPPE brass handle set on rose with escutcheons for interior doors:
- Tested to **DIN EN 1906**: 37-0140A, handle set for commercial applications
- Bearing: loose door handles, non-handed spring cassettes, maintenance-free slide bearing
- Connection: **HOPPE Quick-Fit connection** with HOPPE solid spindle (spindle – receiver components)
- Base: nylon
- Fixing: concealed, multi-purpose screws

Description			Keyhole	F41-R Article no.	F45-R Article no.	F49-R Article no.	F74-R Article no.	P.U.	O.C.
Handle set	35-53	8		2971548	2971661	2971581	2971628	1	10
		8		2971556	**2971679**	2971599	2971636	1	10
	54-72	8		2971564	2971687	2971601	2971644	1	10
	37-51	8 5-8		2971572	2971695	2971610	2971652	1	10

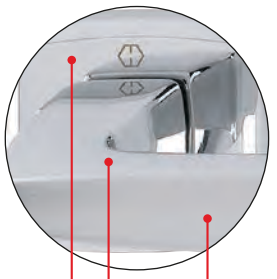

polished finishes
satin front surface

With the F74-R finish, the rose and upper and lower surfaces of the handle are satin and the front surface is polished. The F41-R and F49-R finishes are monochrome.

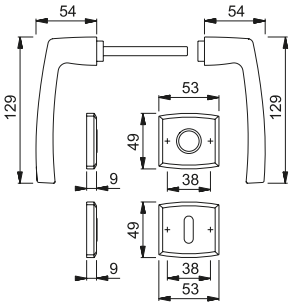

Two-tone finishes:

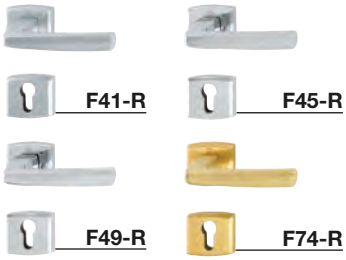

The Resista® guarantee applies to all finishes with the letter **R** in the finish key.

Resista®

Matching products for other applications, available upon request:



Secustik®

M0558/US918

Secustik® window handle
Finish shown: **F45-R**
Detailed information on the Secustik® technology can be found in our manual: HOPPE – Handle of excellence. Basic information.



Quick-FitPlus

M1558/847

HOPPE Quick-FitPlus brass handle set on flat rose without escutcheons for interior doors:
- Tested to **DIN EN 1906**: 37-0140U, handle set for commercial applications
- Bearing: loose door handles, maintenance-free slide bearing
- Connection: **HOPPE Quick-Fit connection** with HOPPE solid spindle (spindle – receiver components)
- Fixing: plug-in stainless steel handle roses with supporting lugs
- Special feature: non-screw and tool-free fitting, 2 mm flat roses

Description				F42-R/F69 Article no.				P.U.	O.C.
Handle set on rose	35-45	8		**3201211**				1	10

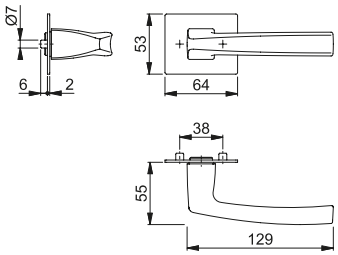

Detailed information on the HOPPE Quick-FitPlus technology and the special door preparation/drilling can be found in our manual: HOPPE – Handle of excellence. Basic information.

Roses with short supporting lugs and through-going supporting lugs (available on request) can be fit with a spring cassette as an option: Z-RFL18 spring cassette and suitable drilling jig for door preparation see page 299.

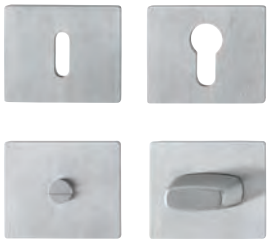

Quick-FitPlus

E847S-SK

HOPPE Quick-FitPlus stainless steel flat escutcheon pair for interior doors:
- Fixing: self-adhesive escutcheons
- Special feature: non-screw and tool-free fitting, 2 mm flat escutcheons

Description			Keyhole	F69 Article no.				P.U.	O.C.
Escutcheon, pair				**3189881**				5	25
				3189929				5	25
Escutcheon, pair	35-45	5-8		**3189953**				2	10

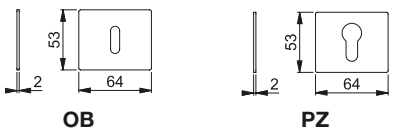

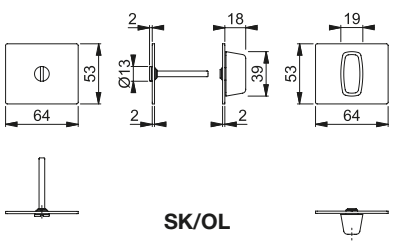

Detailed information on the HOPPE Quick-FitPlus technology can be found in our manual: HOPPE – Handle of excellence. Basic information.

On request, the escutcheons are available also with through-going supporting lugs.

Athinai



Classical, timeless beauty –
like its namesake







Quick-Fit

M156/19K/19KS

HOPPE brass handle set on rose with escutcheons for interior doors:
- Tested to **DIN EN 1906**: 37-0140A, handle set for commercial applications
- Bearing: loose door handles, non-handed spring cassettes, maintenance-free slide bearing
- Connection: **HOPPE Quick-Fit connection** with HOPPE solid spindle (spindle – receiver components)
- Base: nylon
- Fixing: concealed, multi-purpose screws

Article description			Keyhole	F49/F69 Article no.	F77-R/F52-R Article no.			P.U.	O.C.
Handle set	35-53	8		2820820	3054611			1	10
				2820838	3054629			1	10
	38-47	8 5-8		2823051	3054645			1	10

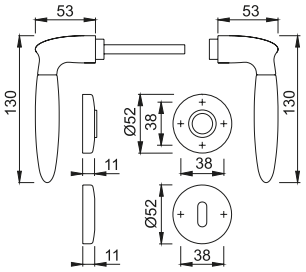

Two-tone finishes:



F49/ F69 **F77-R/ F52-R**

The Resista® guarantee applies to all finishes with the letter **R** in the finish key.

Resista®

Further solutions:
HCS® door handle 210
Pull handles 262

Matching products for other applications, available upon request:



Secustik®

M056/US937

Secustik® window handle
Finish shown: **F49/F69**
Detailed information on the Secustik® technology can be found in our manual: HOPPE – Handle of excellence. Basic information.

Bergen



A series as clear as the
cool north







Quick-Fit

M1602/18K/18KS

HOPPE brass handle set on rose with escutcheons for interior doors:

- Tested to **DIN EN 1906**: 37-0140A, handle set for commercial applications
- Bearing: loose door handles, non-handed spring cassettes, maintenance-free slide bearing
- Connection: **HOPPE Quick-Fit connection** with HOPPE solid spindle (spindle – receiver components)
- Base: nylon
- Fixing: concealed, multi-purpose screws

Article description			Keyhole	F49/F9 Article no.	F77-R/F52-R Article no.			P.U.	O.C.
Handle set	35-53	8		3137782	3137846			1	10
				3137803	3137854			1	10
	37-51	8 5-8		3137820	3137889			1	10

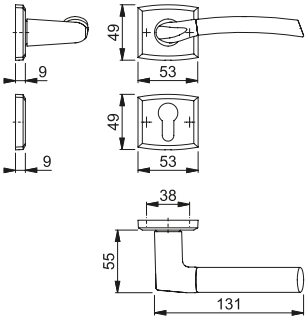

Two-tone finishes:



F49/F9

F77-R/ F52-R

The Resista® guarantee applies to all finishes with the letter **R** in the finish key.

Resista®





Quick-Fit

M1602/19K/19KS

HOPPE brass handle set on rose with escutcheons for interior doors:
- Tested to **DIN EN 1906**: 37-0140A, handle set for commercial applications
- Bearing: loose door handles, non-handed spring cassettes, maintenance-free slide bearing
- Connection: **HOPPE Quick-Fit connection** with HOPPE solid spindle (spindle – receiver components)
- Base: nylon
- Fixing: concealed, multi-purpose screws

Article description			Keyhole	F49/F9 Article no.	F72/F9 Article no.	F77-R/F52-R Article no.		P.U.	O.C.
Handle set	35-53	8		2820969	2851571	3054813		1	10
				2820993	2851597	3054821		1	10
	54-72	8		2821021	on request	3054830		1	10
	38-42	8 5-8			2858781			1	10
	38-47	8 5-8		2825461		3054848		1	10

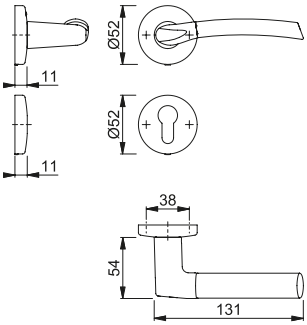

Two-tone finishes:







F49/F9



F72/F9





F77-R/ F52-R

The Resista® guarantee applies to all finishes with the letter **R** in the finish key.

Resista®

Matching products for other applications, available upon request:



Secustik®

M029/US937

Secustik® window handle
Finish shown: **F49/F9**
Detailed information on the Secustik® technology can be found in our manual: HOPPE – Handle of excellence. Basic information.

Brisbane



Simple lines and well thought-out functionality – not unlike Brisbane







Quick-Fit

1670/19K/19KS

HOPPE aluminium handle set on rose with escutcheons for interior doors:
- Tested to **DIN EN 1906**: 37-0140A, handle set for commercial applications
- Bearing: loose door handles, non-handed spring cassettes, maintenance-free slide bearing
- Connection: **HOPPE Quick-Fit connection** with HOPPE solid spindle (spindle – receiver components)
- Base: nylon
- Fixing: concealed, multi-purpose screws

Article description			Keyhole	F1-2 Article no.	F9-2 Article no.			P.U.	O.C.
Handle set	35-45	8		2825209	2825989			1	10
				2825217	2826156			1	10
	65-75	8		2825313	2826199			1	10
	37-47	8 5-8		2825778	2826391			1	10

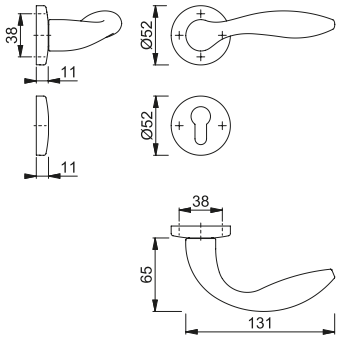

Matching products for other applications, available upon request:



Secustik®

0670/US956

Secustik® window handle
Finish shown: **F1-2**
Detailed information on the Secustik® technology can be found in our manual: HOPPE – Handle of excellence. Basic information.

Bruxelles



An elegant series – and like
Brussels, worth a closer look







Quick-Fit

M129/19K/19KS

HOPPE brass handle set on rose with escutcheons for interior doors:
- Tested to **DIN EN 1906**: 37-0140A, handle set for commercial applications
- Bearing: loose door handles, non-handed spring cassettes, maintenance-free slide bearing
- Connection: **HOPPE Quick-Fit connection** with HOPPE solid spindle (spindle – receiver components)
- Base: nylon
- Fixing: concealed, multi-purpose screws

Article description			Keyhole	F41-R Article no.	F49-R/F98-R Article no.	F77-R Article no.	F77-R/F52-R Article no.	P.U.	O.C.
Handle set	32-47	8		2821857	2821822	3054899	3054952	1	10
				2821890	2821849	**3054901**	3054961	1	10
	64-79	8		2821937	2821929	3054910	3054979	1	10
	38-47	8 5-8		2825495	2824513	3054928	3054987	1	10

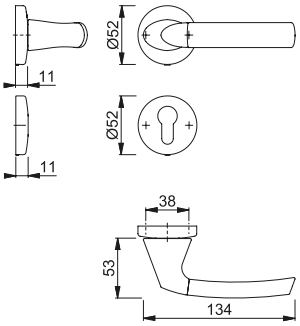

Two-tone finishes:

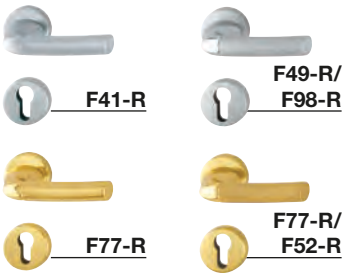

The Resista® guarantee applies to all finishes with the letter **R** in the finish key.

Resista®

Matching products for other applications, available upon request:



Secustik®

M029/US937

Secustik® window handle
Finish shown: **F77-R**
Detailed information on the Secustik® technology can be found in our manual: HOPPE – Handle of excellence. Basic information.

Capri



A series exuding charm and popularity – like this famous Italian island







Quick-Fit

M1950/15K/15KS

HOPPE brass handle set on rose with escutcheons for interior doors:
- Tested to **DIN EN 1906**: 37-0140A, handle set for commercial applications
- Bearing: loose door handles, non-handed spring cassettes, maintenance-free slide bearing
- Connection: **HOPPE Quick-Fit connection** with HOPPE solid spindle (spindle – receiver components)
- Base: nylon
- Fixing: concealed, multi-purpose screws

Article description			Keyhole	F49/F69 Article no.				P.U.	O.C.
Handle set	30-55	8		2823511				1	10
				2823529				1	10
	38-51	8 5-8		2833604				1	10

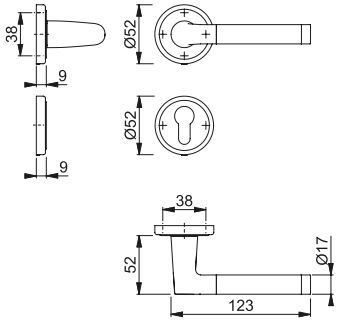

Further solution:
HCS® door handle 211

Matching products for other applications, available upon request:



M0950/U9

Window handle
Finish shown: **F49/F69**

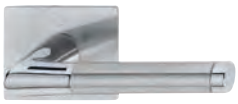

Quick-FitPlus

M1950/847

HOPPE Quick-FitPlus brass handle set on flat rose without escutcheons for interior doors:
- Tested to **DIN EN 1906**: 37-0140U, handle set for commercial applications
- Bearing: loose door handles, maintenance-free slide bearing
- Connection: **HOPPE Quick-Fit connection** with HOPPE solid spindle (spindle – receiver components)
- Fixing: plug-in stainless steel handle roses with supporting lugs
- Special feature: non-screw and tool-free fitting, 2 mm flat roses

Description				F49/F69 Article no.				P.U.	O.C.
Handle set on rose	35-45	8		**3201254**				1	10

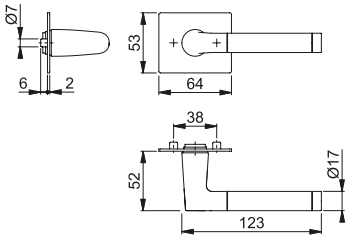

Further solution:
HCS® door handle 211

Detailed information on the HOPPE Quick-FitPlus technology and the special door preparation/drilling can be found in our manual: HOPPE – Handle of excellence. Basic information.

Roses with short supporting lugs and through-going supporting lugs (available on request) can be fit with a spring cassette as an option: Z-RFL18 spring cassette and suitable drilling jig for door preparation see page 299.

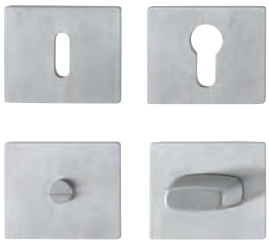

Quick-FitPlus

E847S-SK

HOPPE Quick-FitPlus stainless steel flat escutcheon pair for interior doors:
- Fixing: self-adhesive escutcheons
- Special feature: non-screw and tool-free fitting, 2 mm flat escutcheons

Description			Keyhole	F69 Article no.				P.U.	O.C.
Escutcheon, pair				**3189881**				5	25
				3189929				5	25
Escutcheon, pair	35-45	5-8		**3189953**				2	10

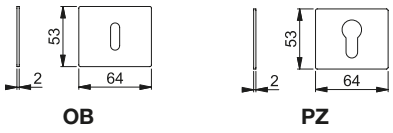

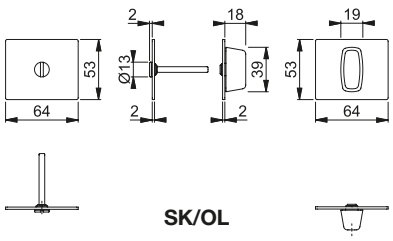

Detailed information on the HOPPE Quick-FitPlus technology can be found in our manual: HOPPE – Handle of excellence. Basic information.

On request, the escutcheons are available also with through-going supporting lugs.

Genova



Fascinatingly attractive –
like this bustling Italian port





Quick-Fit

M1535/265

HOPPE brass handle set on backplate for interior doors:
- Tested to **DIN EN 1906**: 37-0140A, handle set for commercial applications
- Bearing: loose door handles, non-handed spring cassettes, maintenance-free slide bearing
- Connection: **HOPPE Quick-Fit connection** with HOPPE solid spindle (spindle-receiver-components)
- Fixing: visible, multi-purpose screws

Article description			Keyhole/ Distance	F45-R Article no.	F75-R Article no.			P.U.	O.C.
Handle set on backplate	38-44	8/ 8,5	90	2854000	2854026			1	10
			85	**on request**	on request			1	10

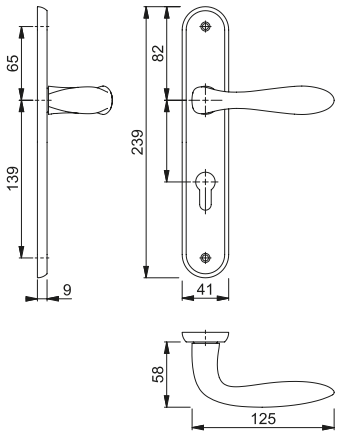

Two-tone finishes:

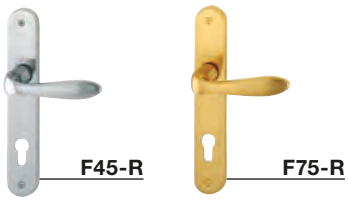

The Resista® guarantee applies to all finishes with the letter **R** in the finish key.

Resista®

Matching products for other applications, available upon request:



Secustik®

M0535/US956

Secustik® window handle
Finish shown: **F45-R**
Detailed information on the Secustik® technology can be found in our manual: HOPPE – Handle of excellence. Basic information.





Quick-Fit

M1535/19K/19KS

HOPPE brass handle set on rose with escutcheons for interior doors:
- Tested to **DIN EN 1906**: 37-0140A, handle set for commercial applications
- Bearing: loose door handles, non-handed spring cassettes, maintenance-free slide bearing
- Connection: **HOPPE Quick-Fit connection** with HOPPE solid spindle (spindle – receiver components)
- Base: nylon
- Fixing: concealed, multi-purpose screws

Article description			Keyhole	F45-R Article no.	F75-R Article no.			P.U.	O.C.
Handle set	32-48	8		2825680	2825701			1	10
				2825698	2825727			1	10
	66-82	8		2825743	2825751			1	10
	38-47	8 5-8		2825786	2825794			1	10

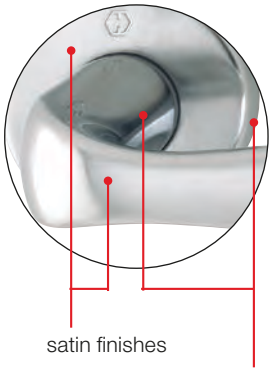

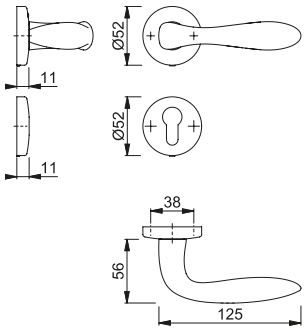

Two-tone finishes:



The Resista® guarantee applies to all finishes with the letter **R** in the finish key.

Resista®





Quick-Fit

M35G/19K/19KS

HOPPE brass knob (pad) set on rose with escutcheons for interior doors:
- Tested to **DIN EN 1906**: 37-0140A, set for commercial applications
- Bearing: loose cranked knobs (pads), non-handed spring cassettes, maintenance-free slide bearing
- Connection: **HOPPE Quick-Fit connection** with HOPPE solid spindle (spindle – receiver components)
- Base: nylon
- Fixing: concealed, multi-purpose screws

Article description			Keyhole	F45-R Article no.	F75-R Article no.			P.U.	O.C.
Knob set on rose	32-48	8		2825807	2825815			1	10
				2825823	2825831			1	10
	66-82	8		2825840	2825866			1	10
	38-47	8 5-8		2825874	2825882			1	10

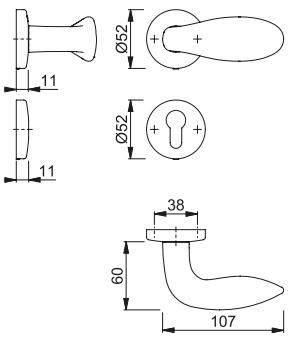

Two-tone finishes:



The Resista® guarantee applies to all finishes with the letter **R** in the finish key.

Resista®



Quick-FitPlus

M1535/29N/29NS

HOPPE Quick-FitPlus brass handle set on flat rose with escutcheons for interior doors:
- Tested to **DIN EN 1906**: 37-0140U, handle set for commercial applications
- Bearing: loose door handles, maintenance-free slide bearing
- Connection: **HOPPE Quick-Fit connection** with HOPPE solid spindle (spindle – receiver components)
- Fixing: plug-in stainless steel handle roses and escutcheons with through-going supporting lugs
- Special feature: non-screw and tool-free fitting, 2 mm flat roses

Article description			Keyhole	F42-R/F69 Article no.				P.U.	O.C.
Handle set E29N/29NS	35-45	8		**3854255**				1	10
Handle set on rose E29N	35-45	8		3854271				1	10

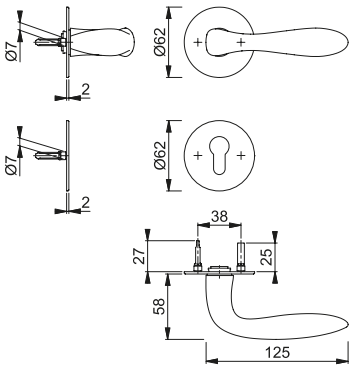

Detailed information on the HOPPE Quick-FitPlus technology and the special door preparation/drilling can be found in our manual: HOPPE – Handle of excellence. Basic information.

The rose can be fit with a spring cassette as an option: Z-RFL18 spring cassette and suitable drilling jig for door preparation see page 299.



Quick-FitPlus

M1535/29NR

HOPPE Quick-FitPlus brass handle set on flat rose with emergency release/turn for interior doors:
- Tested to **DIN EN 1906**: 37-0140U, handle set for commercial buildings
- Bearing: loose door handles, maintenance-free slide bearing
- Connection: **HOPPE Quick-Fit connection** with HOPPE solid spindle (spindle – receiver components)
- Fixing: plug-in stainless steel handle roses with locking function and through-going supporting lugs
- Special feature: non-screw and tool-free fitting, 2 mm flat roses, mortice lock case not required when using this set

Article description			Keyhole	F42-R/F69 Article no.				P.U.	O.C.
Handle set on rose, with locking mechanism (inside)	35-45	8		**3854280**				1	10

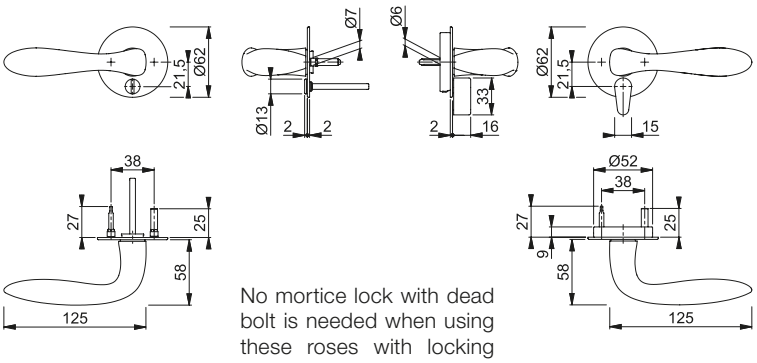

No mortice lock with dead bolt is needed when using these roses with locking function.

Detailed information on the HOPPE Quick-FitPlus technology and the special door preparation/drilling can be found in our manual: HOPPE – Handle of excellence. Basic information.

The rose can be fit with a spring cassette as an option: Z-RFL18 spring cassette and suitable drilling jig for door preparation see page 299.



Quick-FitPlus

M1535/849

HOPPE Quick-FitPlus brass handle set on flat rose without escutcheons for interior doors:
- Tested to **DIN EN 1906**: 37-0140U, handle set for commercial applications
- Bearing: loose door handles, maintenance-free slide bearing
- Connection: **HOPPE Quick-Fit connection** with HOPPE solid spindle (spindle – receiver components)
- Fixing: plug-in stainless steel handle roses with supporting lugs
- Special feature: non-screw and tool-free fitting, 2 mm flat roses

Article description				F42-R/F69 Article no.				P.U.	O.C.
Handle set on rose	35-45	8		**3201238**				1	10

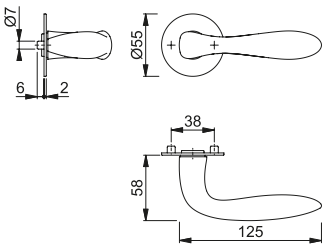

Detailed information on the HOPPE Quick-FitPlus technology and the special door preparation/drilling can be found in our manual: HOPPE – Handle of excellence. Basic information.

Roses with short supporting lugs and through-going supporting lugs (available on request) can be fit with a spring cassette as an option: Z-RFL18 spring cassette and suitable drilling jig for door preparation see page 299.



Quick-FitPlus

E849S-SK

HOPPE Quick-FitPlus stainless steel flat escutcheon pair for interior doors:
- Fixing: self-adhesive escutcheons
- Special feature: non-screw and tool-free fitting, 2 mm flat escutcheons

Article description			Keyhole	F69 Article no.				P.U.	O.C.
Escutcheon, pair				**3190022**				5	25
				3190031				5	25
	35-45	5 8		**3190049**				2	10

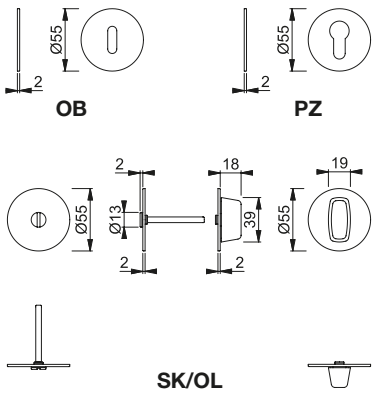

Detailed information on the HOPPE Quick-FitPlus technology can be found in our manual: HOPPE – Handle of excellence. Basic information.

On request, the escutcheons are available also with through-going supporting lugs.

Las Vegas



The town that never sleeps –
continually showing another side
of itself – like the Las Vegas series



Las Vegas (Stainless steel)





Quick-Fit

E1440Z/19K/19KS

HOPPE stainless steel handle set on rose with escutcheons for interior doors:
- Tested to **DIN EN 1906**: 37-0140A, handle set for commercial applications
- Bearing: loose door handles, non-handed spring cassettes, maintenance-free slide bearing
- Connection: **HOPPE Quick-Fit connection** with HOPPE solid spindle (spindle – receiver components)
- Base: nylon
- Fixing: concealed, multi-purpose screws

Article description			Keyhole	F69 Article no.				P.U.	O.C.
Handle set	38-44	8		2825971				1	10
				2825997				1	10
	38-44	8 5-8		2826025				1	10

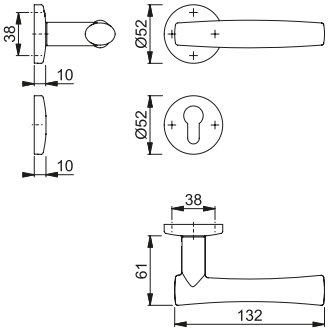

Matching products for other applications, available upon request:



Secustik®

E0440/US956

Secustik® window handle
Finish shown: **F69**
Detailed information on the Secustik® technology can be found in our manual: HOPPE – Handle of excellence. Basic information.



Quick-FitPlus

E1440Z/847

HOPPE Quick-FitPlus stainless steel handle set on flat rose without escutcheons for interior doors:
- Tested to **DIN EN 1906**: 37-0140U, handle set for commercial applications
- Bearing: loose door handles, maintenance-free slide bearing
- Connection: **HOPPE Quick-Fit connection** with HOPPE solid spindle (spindle – receiver components)
- Fixing: plug-in stainless steel handle roses with supporting lugs
- Special feature: non-screw and tool-free fitting, 2 mm flat roses

Description				F42-R/F69 Article no.				P.U.	O.C.
Handle set on rose	35-45	8		**3189793**				1	10

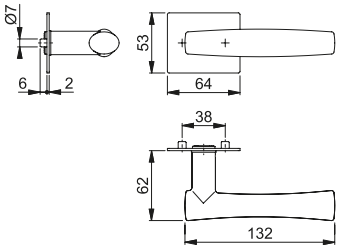

Detailed information on the HOPPE Quick-FitPlus technology and the special door preparation/drilling can be found in our manual: HOPPE – Handle of excellence. Basic information.

Roses with short supporting lugs and through-going supporting lugs (available on request) can be fit with a spring cassette as an option: Z-RFL18 spring cassette and suitable drilling jig for door preparation see page 299.

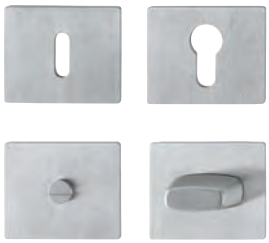

Quick-FitPlus

E847S-SK

HOPPE Quick-FitPlus stainless steel flat escutcheon pair for interior doors:
- Fixing: self-adhesive escutcheons
- Special feature: non-screw and tool-free fitting, 2 mm flat escutcheons

Description			Keyhole	F69 Article no.				P.U.	O.C.
Escutcheon, pair				**3189881**				5	25
				3189929				5	25
Escutcheon, pair	35-45	5-8		**3189953**				2	10

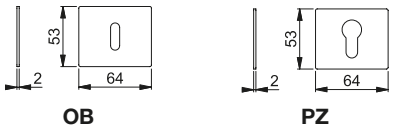

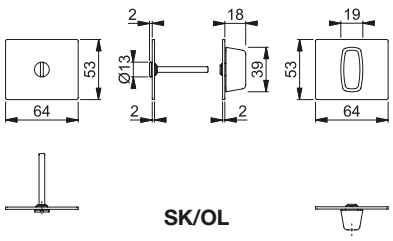

Detailed information on the HOPPE Quick-FitPlus technology can be found in our manual: HOPPE – Handle of excellence. Basic information.

On request, the escutcheons are available also with through-going supporting lugs.

Melbourne

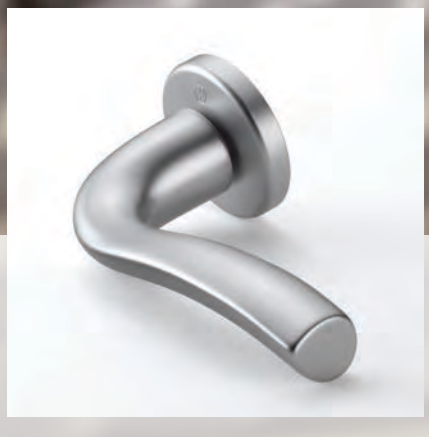

Dynamic drive is the feature this series has in common with its Australian namesake







Quick-Fit

1672/19K/19KS

HOPPE aluminium handle set on rose with escutcheons for interior doors:
- Tested to **DIN EN 1906**: 37-0140A, handle set for commercial applications
- Bearing: loose door handles, non-handed spring cassettes, maintenance-free slide bearing
- Connection: **HOPPE Quick-Fit connection** with HOPPE solid spindle (spindle – receiver components)
- Base: nylon
- Fixing: concealed, multi-purpose screws

Article description			Keyhole	F1-2 Article no.	F9-2 Article no.			P.U.	O.C.
Handle set	35-45	8		2825858	2826009			1	10
				2825891	**2826033**			1	10
	65-75	8		2825903	2826041			1	10
	37-47	8 5-8		2826076	2826105			1	10

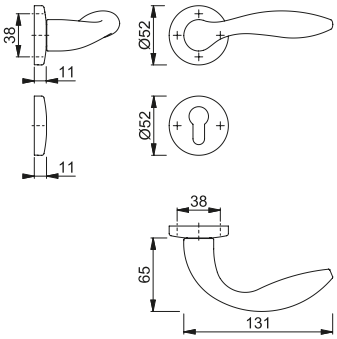

Matching products for other applications, available upon request:



Secustik®

0672/US956

Secustik® window handle
Finish shown: **F9-2**
Detailed information on the Secustik® technology can be found in our manual: HOPPE – Handle of excellence. Basic information.

Monte Carlo



A series of elegance and luxury
– a hint of the small principality
on the Riviera



Monte Carlo (Brass)





Quick-Fit

M1550/25K/25KS

HOPPE brass handle set on rose with escutcheons for interior doors:
- Tested to **DIN EN 1906**: 37-0140A, handle set for commercial applications
- Bearing: loose door handles, non-handed spring cassettes, maintenance-free slide bearing
- Connection: **HOPPE Quick-Fit connection** with HOPPE solid spindle (spindle – receiver components)
- Base: nylon
- Fixing: concealed, multi-purpose screws

Article description			Keyhole	F46-R Article no.	F65-R Article no.	F74-R Article no.	F75-R Article no.	P.U.	O.C.
Handle set	35-44	8		2827407	2827415	2827386	2826244	1	10
				2827440	2827458	2827423	2827343	1	10
	65-74	8		2827491	2827503	2823131	2827378	1	10
	36-43	8 5-8		2833663	2833671	2833655	2833647	1	10

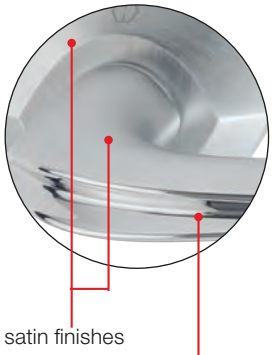

With the F75-R finish, the rose and upper and lower surfaces of the handle are polished and the front surface is satin.

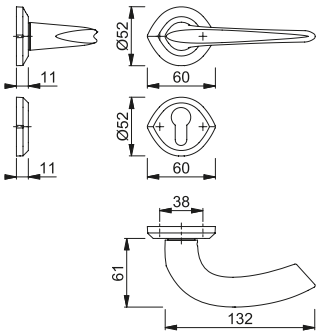

Two-tone finishes:

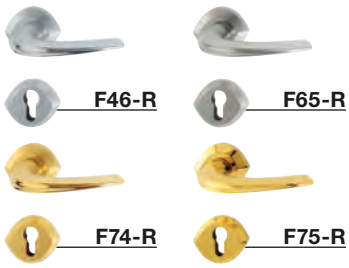

The Resista® guarantee applies to all finishes with the letter **R** in the finish key.

Resista®

Further solution:
Pull handle 265

Matching products for other applications, available upon request:



M425

Sliding door set
Finish shown: **F46-R**
Detailed information on the sliding door sets can be found in our manual: HOPPE – Handle of excellence. Basic information.



Secustik®

M0550/US920

Secustik® window handle
Finish shown: **F46-R**
Detailed information on the Secustik® technology can be found in our manual: HOPPE – Handle of excellence. Basic information.



Quick-Fit

M855/25HK/25K/25KVS/1550

HOPPE brass knob (pad)/handle set on rose with escutcheons for entrance doors:

- Bearing: fixed knob (pad) on the outside, loose door handle on the inside, non-handed spring cassette, maintenance-free slide bearing
- Connection: **HOPPE Quick-Fit connection** with HOPPE solid I-spindle (receiver component)
- Base: nylon, without supporting lugs for handle roses, with supporting lugs for escutcheons
- Fixing: concealed; multi-purpose screws for handle roses; bolt-through, alternate, M4 thread screws with sleeve nuts for escutcheons

Article description			Keyhole	F46-R Article no.	F65-R Article no.	F74-R Article no.	F75-R Article no.	P.U.	O.C.
Knob set	37-42	8		**2727511**	2727529	2727537	2727545	1	4

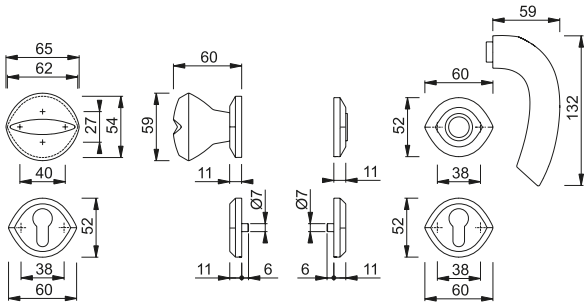

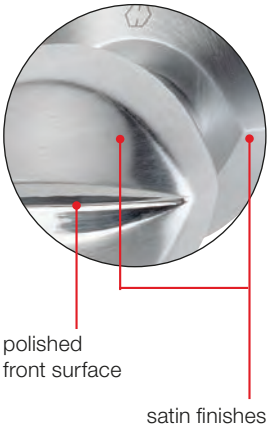

With the F75-R finish, the rose and upper and lower surfaces of the knob are polished and the front surface is satin.

Two-tone finishes:



The Resista® guarantee applies to all finishes with the letter **R** in the finish key.

Resista®

Further solution:
Pull handle 265

Monte Carlo (Brass)





Quick-Fit

M1550/21/21S

HOPPE brass handle set on rose with escutcheons for profile doors:

- Tested to **DIN EN 1906**: 37-0140A
- Bearing: loose door handles, non-handed spring cassettes, maintenance-free slide bearing
- Connection: **HOPPE Quick-Fit connection** with HOPPE solid spindle (spindle – receiver components)
- Base: nylon
- Fixing: concealed, multi-purpose screws

Article description			Keyhole	F46-R Article no.	F65-R Article no.	F74-R Article no.	F75-R Article no.	P.U.	O.C.
Handle set	35-44	8		2827538	2827546	2827520	**2827511**	1	4
	65-74	8		2827571	2827589	2827562	2827554	1	4

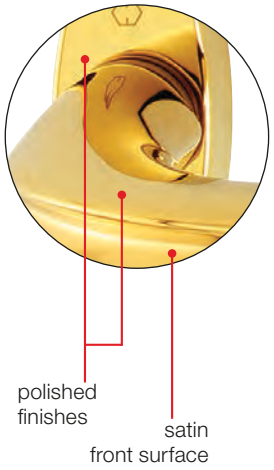

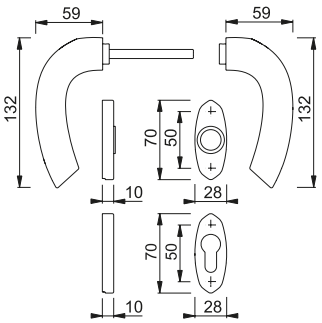

Two-tone finishes:



The Resista® guarantee applies to all finishes with the letter **R** in the finish key.

Resista®

Further solution:
Pull handle 265

Interior door handles





more than usual duraplus®







Quick-Fit

1400/42K/42KS

HOPPE aluminium handle set on rose with escutcheons for interior doors:
- Tested to **DIN EN 1906**: 37-0140A, handle set for commercial applications
- Bearing: loose door handles, non-handed spring cassettes, maintenance-free slide bearing
- Connection: **HOPPE Quick-Fit connection** with HOPPE solid spindle (receiver – receiver components)
- Base: nylon
- Fixing: concealed, multi-purpose screws

Article description			Keyhole	F1	F1/F69	F9		P.U.	O.C.
				Article no.	Article no.	Article no.			
Handle set (spindle – receiver handle)	37-47	8		3276900	3276951	3276942		1	10
Handle set*	37-47	8		**3277081**	3277101	3277099		1	10
Handle set (spindle – receiver handle)	37-47	8 5-8		3277030	3277072	3277048		1	10

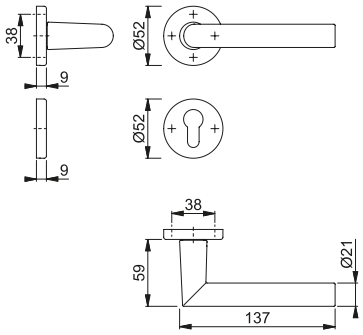

*** Note:**
For door thicknesses different from the one shown in the table, please exchange the spindle.

To be used exclusively with **HOPPE spindles**.

Matching products for other applications, available upon request:



Secustik®

0400/US956

Secustik® window handle
Finish shown: **F1**
Detailed information on the Secustik® technology can be found in our manual: HOPPE – Handle of excellence. Basic information.



Quick-Fit

E1400Z/42K/42KS

HOPPE stainless steel handle set on rose with escutcheons for interior doors:
- Tested to **DIN EN 1906**: 37-0140A, handle set for commercial applications
- Bearing: loose door handles, non-handed spring cassettes, maintenance-free slide bearing
- Connection: **HOPPE Quick-Fit connection** with HOPPE solid spindle (receiver – receiver components)
- Base: nylon
- Fixing: concealed, multi-purpose screws

Article description			Keyhole	F69 Article no.				P.U.	O.C.
Handle set (spindle – receiver handle)	35-45	8		3289524				1	10
				3289541				1	10
Handle set*	35-45	8		3278690				1	10
Handle set (spindle – receiver handle)	40-45	8 5-8		3289655				1	10

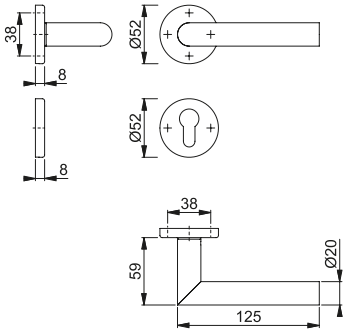

*** Note:**
For door thicknesses different from the one shown in the table, please exchange the spindle.

To be used exclusively with **HOPPE spindles**.

Matching products for other applications, available upon request:



Secustik®

E0400/US956

Secustik® window handle
Finish shown: **F69**
Detailed information on the Secustik® technology can be found in our manual: HOPPE – Handle of excellence. Basic information.



Quick-FitPlus

E1400Z/848

HOPPE Quick-FitPlus stainless steel handle set on flat rose without escutcheons for interior doors:
- Tested to **DIN EN 1906**: 37-0140U, handle set for commercial applications
- Bearing: loose door handles, maintenance-free slide bearing
- Connection: **HOPPE Quick-Fit connection** with HOPPE solid spindle (spindle – receiver components)
- Fixing: plug-in handle roses with supporting lugs
- Special feature: non-screw and tool-free fitting, 2 mm flat roses

Article description				F69 Article no.				P.U.	O.C.
Handle set on rose	35-45	8		**3374497**				1	10

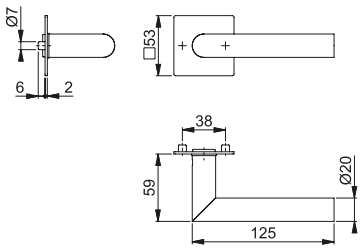

Detailed information on the HOPPE Quick-FitPlus technology and the special door preparation/drilling can be found in our manual: HOPPE – Handle of excellence. Basic information.

Roses with short supporting lugs and through-going supporting lugs (available on request) can be fit with a spring cassette as an option: Z-RFL18 spring cassette and suitable drilling jig for door preparation see page 299.



Quick-FitPlus

E848S-SK

HOPPE Quick-FitPlus stainless steel flat escutcheon pair for interior doors:
- Fixing: self-adhesive escutcheons
- Special feature: non-screw and tool-free fitting, 2 mm flat escutcheons

Article description			Keyhole	F69 Article no.				P.U.	O.C.
Escutcheon, pair				**3189988**				5	25
				3189996				5	25
	35-45	5 8		**3190006**				2	10

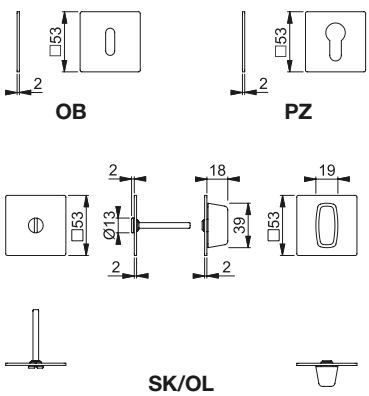

Detailed information on the HOPPE Quick-FitPlus technology can be found in our manual: HOPPE – Handle of excellence. Basic information.

On request, the escutcheons are available also with through-going supporting lugs.

HOPPE®
Handle of excellence.





E1420Z/42K/42KS

HOPPE stainless steel handle set on rose with escutcheons for interior doors:
- Bearing: sprung fixed/movable door handles, maintenance-free slide bearing
- Connection: HOPPE profile spindle (receiver – receiver components)
- Base: nylon
- Fixing: concealed, multi-purpose screws

Article description			Keyhole	F69 Article no.				P.U.	O.C.
Handle set	37-47	8		2072884				1	10
				2072876				1	10
	37-47	8 5-8		3047728				1	10

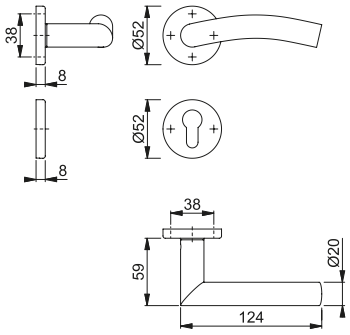







Quick-Fit

1530/42K/42KS

HOPPE aluminium handle set on rose with escutcheons for interior doors:
- Tested to **DIN EN 1906**: 37-0140A, handle set for commercial applications
- Bearing: loose door handles, non-handed spring cassettes, maintenance-free slide bearing
- Connection: **HOPPE Quick-Fit connection** with HOPPE solid spindle (spindle – receiver components)
- Base: nylon
- Fixing: concealed, multi-purpose screws

Article description			Keyhole	F1 Article no.	F9 Article no.			P.U.	O.C.
Handle set	35-45	8		3202601	3202610			1	10
				2954473	2910868			1	10
	45	8 5-8		3203330	3203348			1	10

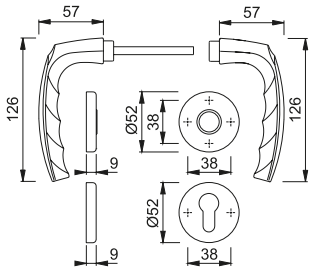

Further solution:
HCS® door handles.....218

Matching products for other applications, available upon request:



Secustik®

0530/US952

Secustik® window handle
Finish shown: **F1**
Detailed information on the Secustik® technology can be found in our manual: HOPPE – Handle of excellence. Basic information.



Quick-Fit

M1530/379

HOPPE brass handle set on backplate for interior doors:

- Tested to **DIN EN 1906**: 37-0140A, handle set for commercial applications
- Bearing: loose door handles, non-handed spring cassettes, maintenance-free slide bearing
- Connection: **HOPPE Quick-Fit connection** with HOPPE solid spindle (spindle-receiver-components)
- Fixing: visible, multi-purpose screws

Article description			Keyhole/ Distance	F41-R Article no.	F71 Article no.	F72 Article no.	F77-R Article no.	P.U.	O.C.
Handle set on backplate	32-47	8	90	2821591	2821435	2821478	2821654	1	10
			85	**2821611**	2821443		2821662	1	10
	64-79	8	85	2821734	2821700	2821718		1	10

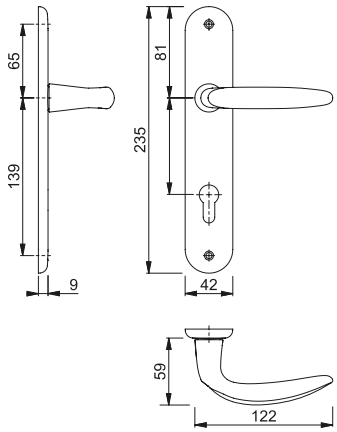

The Resista® guarantee applies to all finishes with the letter **R** in the finish key.

Resista®

2





Quick-Fit

M1530/23K/23KS

HOPPE brass handle set on rose with escutcheons for interior doors:
- Tested to **DIN EN 1906**: 37-0140A, handle set for commercial applications
- Bearing: loose door handles, non-handed spring cassettes, maintenance-free slide bearing
- Connection: **HOPPE Quick-Fit connection** with HOPPE solid spindle (spindle – receiver components)
- Base: nylon
- Fixing: concealed, multi-purpose screws

Article description			Keyhole	F41-R	F71	F72	F77-R	P.U.	O.C.
				Article no.	Article no.	Article no.	Article no.		
Handle set	32-47	8		2832071	2830260	2832054	2832089	1	10
				2832118		2832100	**2832126**	1	10
	64-79	8		2832185	2832169	2832177	2832193	1	10
	40-47	8 5-8		2832222	2824492	2832206	2832231	1	10

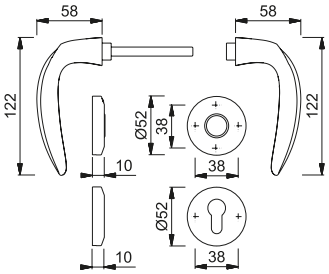

The Resista® guarantee applies to all finishes with the letter **R** in the finish key.

Resista®

Matching products for other applications, available upon request:



Secustik®

M0530/US956

Secustik® window handle
Finish shown: **F77-R**
Detailed information on the Secustik® technology can be found in our manual: HOPPE – Handle of excellence. Basic information.



Quick-FitPlus

M1530/29N/29NS

HOPPE Quick-FitPlus brass handle set on flat rose with escutcheons for interior doors:
- Tested to **DIN EN 1906**: 37-0140U, handle set for commercial applications
- Bearing: loose door handles, maintenance-free slide bearing
- Connection: **HOPPE Quick-Fit connection** with HOPPE solid spindle (spindle – receiver components)
- Fixing: plug-in stainless steel handle roses and escutcheons with through-going supporting lugs
- Special feature: non-screw and tool-free fitting, 2 mm flat roses

Article description			Keyhole	F42-R/F69 Article no.				P.U.	O.C.
Handle set E29N/29NS	35-48	8		**on request**				1	10
Handle set on rose E29N	35-48	8		on request				1	10

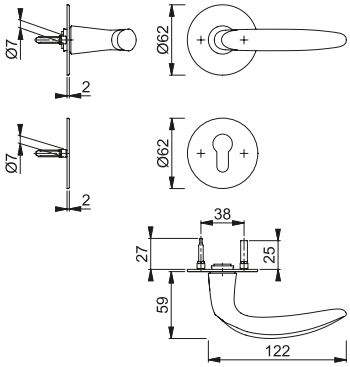

Detailed information on the HOPPE Quick-FitPlus technology and the special door preparation/drilling can be found in our manual: HOPPE – Handle of excellence. Basic information.

The rose can be fit with a spring cassette as an option: Z-RFL18 spring cassette and suitable drilling jig for door preparation see page 299.



Quick-FitPlus

M1530/29NR

HOPPE Quick-FitPlus brass handle set on flat rose with emergency release/turn for interior doors:
- Tested to **DIN EN 1906**: 37-0140U, handle set for commercial buildings
- Bearing: loose door handles, maintenance-free slide bearing
- Connection: **HOPPE Quick-Fit connection** with HOPPE solid spindle (spindle – receiver components)
- Fixing: plug-in stainless steel handle roses with locking function and through-going supporting lugs
- Special feature: non-screw and tool-free fitting, 2 mm flat roses, mortice lock case not required when using this set

Article description			Keyhole	F42-R/F69 Article no.				P.U.	O.C.
Handle set on rose, with locking mechanism (inside)	35-45	8		**3854263**				1	10

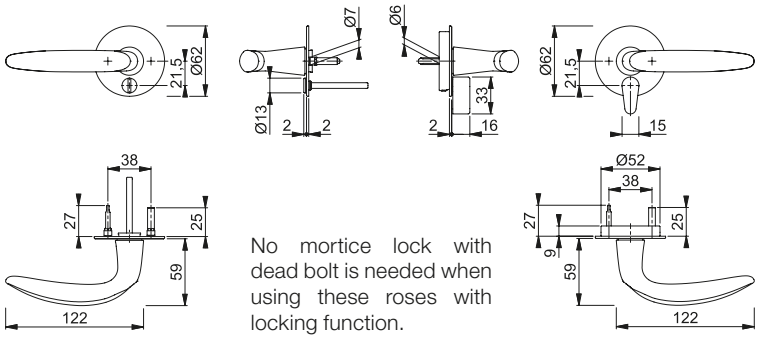

No mortice lock with dead bolt is needed when using these roses with locking function.

Detailed information on the HOPPE Quick-FitPlus technology and the special door preparation/drilling can be found in our manual: HOPPE – Handle of excellence. Basic information.

The rose can be fit with a spring cassette as an option: Z-RFL18 spring cassette and suitable drilling jig for door preparation see page 299.



Quick-FitPlus

M1530/849

HOPPE Quick-FitPlus brass handle set on flat rose without escutcheons for interior doors:
- Tested to **DIN EN 1906**: 37-0140U, handle set for commercial applications
- Bearing: loose door handles, maintenance-free slide bearing
- Connection: **HOPPE Quick-Fit connection** with HOPPE solid spindle (spindle – receiver components)
- Fixing: plug-in stainless steel handle roses with supporting lugs
- Special feature: non-screw and tool-free fitting, 2 mm flat roses

Article description				F42-R/F69 Article no.				P.U.	O.C.
Handle set on rose	35-45	8		**3201191**				1	10

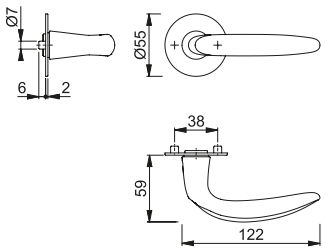

Detailed information on the HOPPE Quick-FitPlus technology and the special door preparation/drilling can be found in our manual: HOPPE – Handle of excellence. Basic information.

Roses with short supporting lugs and through-going supporting lugs (available on request) can be fit with a spring cassette as an option: Z-RFL18 spring cassette and suitable drilling jig for door preparation see page 299.



Quick-FitPlus

E849S-SK

HOPPE Quick-FitPlus stainless steel flat escutcheon pair for interior doors:
- Fixing: self-adhesive escutcheons
- Special feature: non-screw and tool-free fitting, 2 mm flat escutcheons

Article description			Keyhole	F69 Article no.				P.U.	O.C.
Escutcheon, pair				**3190022**				5	25
				3190031				5	25
	35-45	5 8		**3190049**				2	10

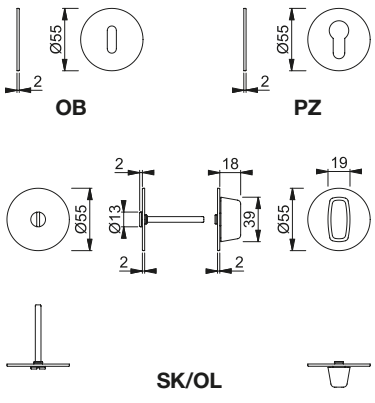

Detailed information on the HOPPE Quick-FitPlus technology can be found in our manual: HOPPE – Handle of excellence. Basic information.

On request, the escutcheons are available also with through-going supporting lugs.







Quick-Fit

E150Z/42K/42KS

HOPPE stainless steel handle set on rose with escutcheons for interior doors:
- Tested to **DIN EN 1906**: 37-0140A, handle set for commercial applications
- Bearing: loose door handles, non-handed spring cassettes, maintenance-free slide bearing
- Connection: **HOPPE Quick-Fit connection** with HOPPE solid spindle (spindle – receiver components)
- Base: nylon
- Fixing: concealed, multi-purpose screws

Article description			Keyhole	F69 Article no.				P.U.	O.C.
Handle set (spindle – receiver handle)	35-45	8		3289938				1	10
				3289954				1	10
Handle set*	35-45	8		3278788				1	10
Handle set (spindle – receiver handle)	40-45	8 5-8		3289410				1	10

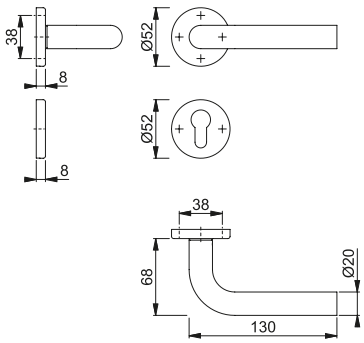

*** Note:**
For door thicknesses different from the one shown in the table, please exchange the spindle.

To be used exclusively with **HOPPE spindles**.

Matching products for other applications, available upon request:



Secustik®

E050/US956

Secustik® window handle
Finish shown: **F69**
Detailed information on the Secustik® technology can be found in our manual: HOPPE – Handle of excellence. Basic information.







Quick-Fit

1505/42K/42KS New

HOPPE aluminium handle set on rose with escutcheons for interior doors:
- Bearing: loose door handles, non-handed spring cassettes, maintenance-free slide bearing
- Connection: **HOPPE Quick-Fit connection** with HOPPE solid spindle (spindle – receiver components)
- Base: nylon
- Fixing: concealed, multi-purpose screws

Article description			Keyhole	F49/F9-2 Article no.				P.U.	O.C.
Handle set (spindle – receiver handle)	35-45	8		3895989				1	10
Handle set*	35-45	8		**3895997**				1	10
Handle set (spindle – receiver handle)	40	8 5-8		3896009				1	10

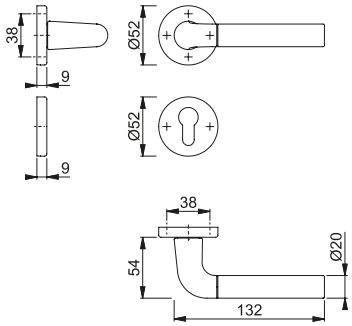

*** Note:**
For door thicknesses different from the one shown in the table, please exchange the spindle.

To be used exclusively with **HOPPE spindles**.

HOPPE®
Handle of excellence.







Quick-Fit

M1545/23K/23KS

HOPPE brass handle set on rose with escutcheons for interior doors:
- Tested to **DIN EN 1906**: 37-0140A, handle set for commercial applications
- Bearing: loose door handles, non-handed spring cassettes, maintenance-free slide bearing
- Connection: **HOPPE Quick-Fit connection** with HOPPE solid spindle (spindle – receiver components)
- Base: nylon
- Fixing: concealed, multi-purpose screws

Article description			Keyhole	F41-R Article no.	F49-R Article no.	F71 Article no.	F72 Article no.	P.U.	O.C.
Handle set	35-55	8		2822227	2822235	2822180	2822198	1	10
				2822307	2822315	**2822260**	2822286	1	10
	56-76	8		2822411	2822446	2822374	2822391	1	10
	40-49	8 5-8		2825532	2825541	2825508	2825516	1	10

Article description			Keyhole	F73 Article no.	F77-R Article no.			P.U.	O.C.
Handle set	35-55	8		2822201	2822251			1	10
				2822294	2822331			1	10
	56-76	8		2822403	2822454			1	10
	40-49	8 5-8		2825524	2825559			1	10

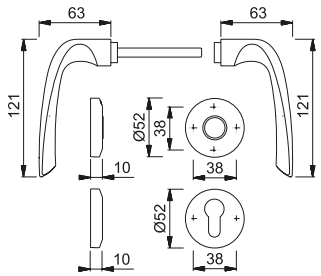

The Resista® guarantee applies to all finishes with the letter **R** in the finish key.

Resista®

Further solution:
Pull handles 268

Matching products for other applications, available upon request:



Secustik®

M0545/US956

Secustik® window handle
Finish shown: **F71**
Detailed information on the Secustik® technology can be found in our manual: HOPPE – Handle of excellence. Basic information.





Quick-Fit

M1545/30P/30PS

HOPPE brass handle set on rose with escutcheons for profile doors:
- Tested to **DIN EN 1906**: 37-0140U
- Bearing: loose door handles, maintenance-free slide bearing
- Connection: **HOPPE Quick-Fit connection** with HOPPE solid spindle (spindle – receiver components)
- Base: nylon
- Fixing: concealed, multi-purpose screws

Article description			Keyhole	F41-R	F49-R	F71	F72	P.U.	O.C.
				Article no.	Article no.	Article no.	Article no.		
Handle set	35-55	8		2825591	2825604	**2825567**	2825575	1	4
	56-76	8			2825663	2825621	2825639	1	4

Article description			Keyhole	F73	F77-R			P.U.	O.C.
				Article no.	Article no.				
Handle set	35-55	8		2825583	2825612			1	4
	56-76	8		2825647	2825671			1	4

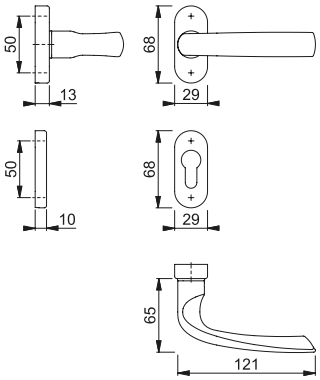

The Resista® guarantee applies to all finishes with the letter **R** in the finish key.

Resista®

Further solution:
Pull handles 268



Spring cassette available on request.



Quick-FitPlus

M1545/29N/29NS

HOPPE Quick-FitPlus brass handle set on flat rose with escutcheons for interior doors:
- Tested to **DIN EN 1906**: 37-0140U, handle set for commercial applications
- Bearing: loose door handles, maintenance-free slide bearing
- Connection: **HOPPE Quick-Fit connection** with HOPPE solid spindle (spindle – receiver components)
- Fixing: plug-in stainless steel handle roses and escutcheons with through-going supporting lugs
- Special feature: non-screw and tool-free fitting, 2 mm flat roses

Article description			Keyhole	F42-R/F69 Article no.				P.U.	O.C.
Handle set E29N/29NS	35-48	8		**on request**				1	10
Handle set on rose E29N	35-48	8		on request				1	10

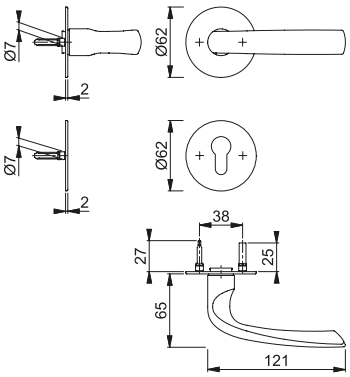

Further solution:
Pull handles 268

Detailed information on the HOPPE Quick-FitPlus technology and the special door preparation/drilling can be found in our manual: HOPPE – Handle of excellence. Basic information.

The rose can be fit with a spring cassette as an option: Z-RFL18 spring cassette and suitable drilling jig for door preparation see page 299.



Quick-FitPlus

M1545/29NR

HOPPE Quick-FitPlus brass handle set on flat rose with emergency release/turn for interior doors:
- Tested to **DIN EN 1906**: 37-0140U, handle set for commercial buildings
- Bearing: loose door handles, maintenance-free slide bearing
- Connection: **HOPPE Quick-Fit connection** with HOPPE solid spindle (spindle – receiver components)
- Fixing: plug-in stainless steel handle roses with locking function and through-going supporting lugs
- Special feature: non-screw and tool-free fitting, 2 mm flat roses, mortice lock case not required when using this set

Article description			Keyhole	F42-R/F69 Article no.				P.U.	O.C.
Handle set on rose, with locking mechanism (inside)	38-48	8		**on request**				1	10

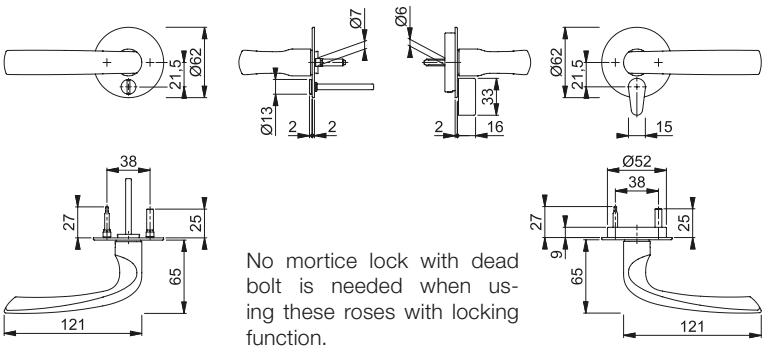

No mortice lock with dead bolt is needed when using these roses with locking function.

Detailed information on the HOPPE Quick-FitPlus technology and the special door preparation/drilling can be found in our manual: HOPPE – Handle of excellence. Basic information.

The rose can be fit with a spring cassette as an option: Z-RFL18 spring cassette and suitable drilling jig for door preparation see page 299.



Quick-FitPlus

M1545/849

HOPPE Quick-FitPlus brass handle set on flat rose without escutcheons for interior doors:
- Tested to **DIN EN 1906**: 37-0140U, handle set for commercial applications
- Bearing: loose door handles, maintenance-free slide bearing
- Connection: **HOPPE Quick-Fit connection** with HOPPE solid spindle (spindle – receiver components)
- Fixing: plug-in stainless steel handle roses with supporting lugs
- Special feature: non-screw and tool-free fitting, 2 mm flat roses

Article description				F42-R/F69 Article no.				P.U.	O.C.
Handle set on rose	35-45	8		**3201203**				1	10

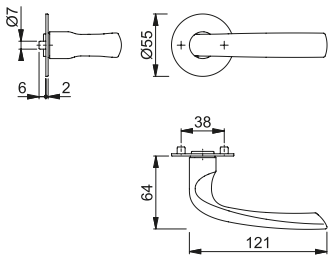

Further solution:
Pull handles 268

Detailed information on the HOPPE Quick-FitPlus technology and the special door preparation/drilling can be found in our manual: HOPPE – Handle of excellence. Basic information.

Roses with short supporting lugs and through-going supporting lugs (available on request) can be fit with a spring cassette as an option: Z-RFL18 spring cassette and suitable drilling jig for door preparation see page 299.



Quick-FitPlus

E849S-SK

HOPPE Quick-FitPlus stainless steel flat escutcheon pair for interior doors:
- Fixing: self-adhesive escutcheons
- Special feature: non-screw and tool-free fitting, 2 mm flat escutcheons

Article description			Keyhole	F69 Article no.				P.U.	O.C.
Escutcheon, pair				**3190022**				5	25
				3190031				5	25
	35-45	5 8		**3190049**				2	10

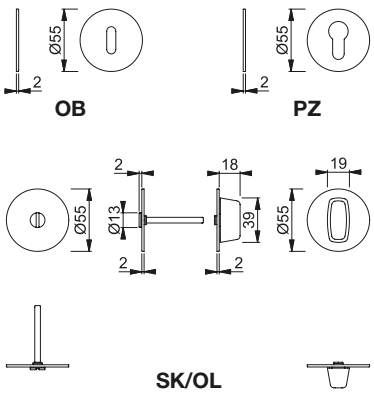

Detailed information on the HOPPE Quick-FitPlus technology can be found in our manual: HOPPE – Handle of excellence. Basic information.

On request, the escutcheons are available also with through-going supporting lugs.







Quick-Fit

1643/52K/52KS New

HOPPE aluminium handle set on rose with escutcheons for interior doors:
- Tested to **DIN EN 1906**: 37-0140A, handle set for commercial applications
- Bearing: loose door handles, non-handed spring cassettes, maintenance-free slide bearing
- Connection: **HOPPE Quick-Fit connection** with HOPPE solid spindle (receiver – receiver components)
- Base: nylon
- Fixing: concealed, multi-purpose screws

Article description			Keyhole	F1 Article no.	F9 Article no.			P.U.	O.C.
Handle set (spindle – receiver handle)	37-47	8		3652506	3652629			1	40
Handle set*	67-77	8		**3652231**	3652266			1	20
Handle set (spindle – receiver handle)	37-47	8 5-8		3652661	3653234			1	20

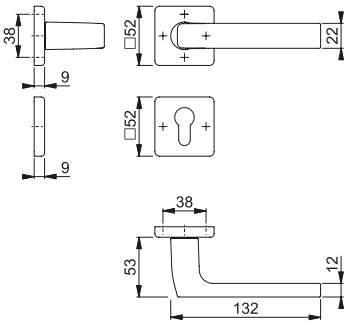

*** Note:**
For door thicknesses different from the one shown in the table, please exchange the spindle.

To be used exclusively with **HOPPE spindles**.

Matching products for other applications, available upon request:



Secu100®
Secustik®

1643/US950S (100 Nm)

Secu100® + Secustik® window handle
Finish shown: **F1**
Detailed information on the Secu100® + Secustik® technology can be found in our manual: HOPPE – Handle of excellence. Basic information.



Secustik®

0643/US944

Secustik® window handle
Finish shown: **F1**
Detailed information on the Secustik® technology can be found in our manual: HOPPE – Handle of excellence. Basic information.



HS-0643/419/420

Lift/slide door set with shell
Finish shown: **F1**





Quick-Fit

E1643Z/52K/52KS New

HOPPE stainless steel handle set on rose with escutcheons for interior doors:
- Tested to **DIN EN 1906**: 37-0140A, handle set for commercial applications
- Bearing: loose door handles, non-handed spring cassettes, maintenance-free slide bearing
- Connection: **HOPPE Quick-Fit connection** with HOPPE solid spindle (receiver – receiver components)
- Base: nylon
- Fixing: concealed, multi-purpose screws

Article description			Keyhole	F69 Article no.				P.U.	O.C.
Handle set (spindle – receiver handle)	35-45	8		3676971				1	10
Handle set*	35-45	8		**3676997**				1	10
Handle set (spindle – receiver handle)	40-45	8 5-8		3677113				1	20
				3703051				1	10

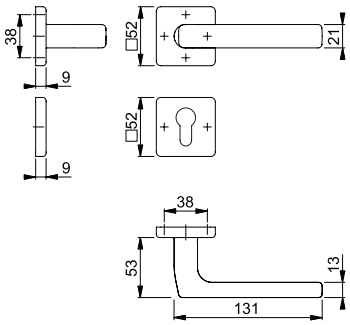

*** Note:**
For door thicknesses different from the one shown in the table, please exchange the spindle.

To be used exclusively with **HOPPE spindles**.

Matching products for other applications, available upon request:



Secu100®
Secustik®

E1643Z/US950S (100 Nm)

Secu100® + Secustik® window handle
Finish shown: **F69**
Detailed information on the Secu100® + Secustik® technology can be found in our manual: HOPPE – Handle of excellence. Basic information.



Secustik®

E0643/US944

Secustik® window handle
Finish shown: **F69**
Detailed information on the Secustik® technology can be found in our manual: HOPPE – Handle of excellence. Basic information.



Quick-FitPlus

E1643Z/848 New

HOPPE Quick-FitPlus stainless steel handle set on flat rose without escutcheons for interior doors:
- Tested to **DIN EN 1906**: 37-0140U, handle set for commercial applications
- Bearing: loose door handles, maintenance-free slide bearing
- Connection: **HOPPE Quick-Fit connection** with HOPPE solid spindle (spindle – receiver components)
- Fixing: plug-in handle roses with supporting lugs
- Special feature: non-screw and tool-free fitting, 2 mm flat roses

Article description				F69 Article no.				P.U.	O.C.
Handle set on rose	35-45	8		**3588583**				1	10

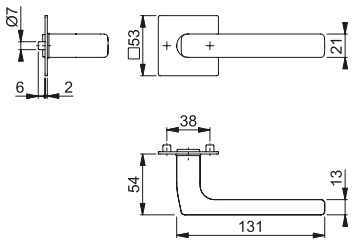

Detailed information on the HOPPE Quick-FitPlus technology and the special door preparation/drilling can be found in our manual: HOPPE – Handle of excellence. Basic information.

Roses with short supporting lugs and through-going supporting lugs (available on request) can be fit with a spring cassette as an option: Z-RFL18 spring cassette and suitable drilling jig for door preparation see page 299.



Quick-FitPlus

E848S-SK

HOPPE Quick-FitPlus stainless steel flat escutcheon pair for interior doors:
- Fixing: self-adhesive escutcheons
- Special feature: non-screw and tool-free fitting, 2 mm flat escutcheons

Article description			Keyhole	F69 Article no.				P.U.	O.C.
Escutcheon, pair				**3189988**				5	25
				3189996				5	25
	35-45	5 8		**3190006**				2	10

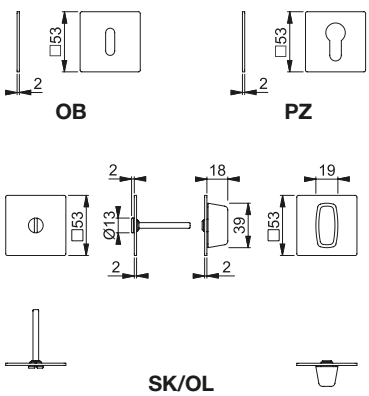

Detailed information on the HOPPE Quick-FitPlus technology can be found in our manual: HOPPE – Handle of excellence. Basic information.

On request, the escutcheons are available also with through-going supporting lugs.





Quick-Fit

M1643/843K/843KS

HOPPE brass handle set on rose with escutcheons for interior doors:
- Tested to **DIN EN 1906**: 37-0140A, handle set for commercial applications
- Bearing: loose door handles, non-handed spring cassettes, maintenance-free slide bearing
- Connection: **HOPPE Quick-Fit connection** with HOPPE solid spindle (receiver – receiver components)
- Base: nylon
- Fixing: concealed, multi-purpose screws

Article description			Keyhole	F41-R Article no.	F49-R Article no.	F71 Article no.	F77-R Article no.	P.U.	O.C.
Handle set (spindle – receiver handle)	37-52	8		3392601	3392636	3392572	3392661	1	10
Handle set*	62-74	8		**3392610**	3392644	3392581	3392679	1	10
Handle set (spindle – receiver handle)	38-48	8 5-8		3392628	3392652	3392599	3392687	1	10

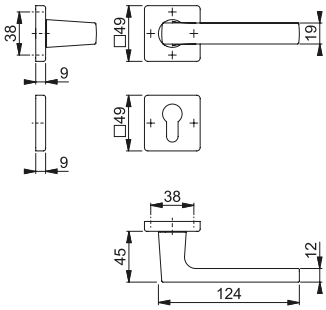

The Resista® guarantee applies to all finishes with the letter **R** in the finish key.

Resista®

*** Note:**
For door thicknesses different from the one shown in the table, please exchange the spindle.

To be used exclusively with **HOPPE spindles**.

Further solution:
Pull handle 269

Matching products for other applications, available upon request:



Secu100®
Secustik®

M0643S/US943 (100 Nm)

Secu100® + Secustik® window handle
Finish shown: **F41-R**
Detailed information on the Secu100® + Secustik® technology can be found in our manual: HOPPE – Handle of excellence. Basic information.



Secustik®

M0643/US943

Secustik® window handle
Finish shown: **F41-R**
Detailed information on the Secustik® technology can be found in our manual: HOPPE – Handle of excellence. Basic information.



Secustik®

PSK-M0643/US943

Secustik® window handle for parallel slide/tilt doors
Finish shown: **F41-R**
Detailed information on the Secustik® technology can be found in our manual: HOPPE – Handle of excellence. Basic information.

HS-M0643/419N/423

Lift/slide door set with shell
Finish shown: **F41-R**



M43/843

Knob on rose
Finish shown: **F41-R**



Quick-FitPlus

M1643/848

HOPPE Quick-FitPlus brass handle set on flat rose without escutcheons for interior doors:
- Tested to **DIN EN 1906**: 37-0140U, handle set for commercial applications
- Bearing: loose door handles, maintenance-free slide bearing
- Connection: **HOPPE Quick-Fit connection** with HOPPE solid spindle (spindle – receiver components)
- Fixing: plug-in stainless steel handle roses with supporting lugs
- Special feature: non-screw and tool-free fitting, 2 mm flat roses

Article description				F42-R/F69 Article no.				P.U.	O.C.
Handle set on rose	35-45	8		**3429144**				1	10

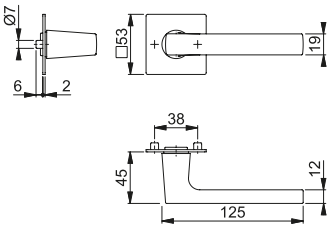

Further solution:
Pull handle 269

Detailed information on the HOPPE Quick-FitPlus technology and the special door preparation/drilling can be found in our manual: HOPPE – Handle of excellence. Basic information.

Roses with short supporting lugs and through-going supporting lugs (available on request) can be fit with a spring cassette as an option: Z-RFL18 spring cassette and suitable drilling jig for door preparation see page 299.



Quick-FitPlus

E848S-SK

HOPPE Quick-FitPlus stainless steel flat escutcheon pair for interior doors:
- Fixing: self-adhesive escutcheons
- Special feature: non-screw and tool-free fitting, 2 mm flat escutcheons

Article description			Keyhole	F69 Article no.				P.U.	O.C.
Escutcheon, pair				**3189988**				5	25
				3189996				5	25
	35-45	5 8		**3190006**				2	10

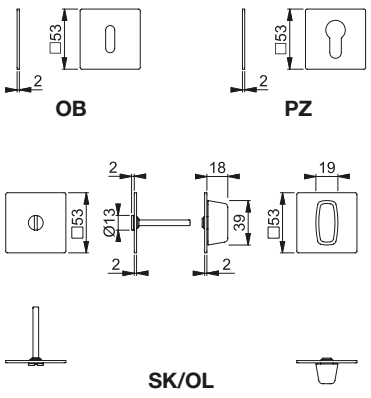

Detailed information on the HOPPE Quick-FitPlus technology can be found in our manual: HOPPE – Handle of excellence. Basic information.

On request, the escutcheons are available also with through-going supporting lugs.







Sertos

1644F/52/52KVS New

HOPPE aluminium handle set on rose with escutcheons for interior doors:
- Meets the requirements of **DIN EN 1906**: 47-0130U, handle set for commercial applications
- Bearing: fixed/movable door handles, HOPPE **Sertos** clip-in technology, maintenance-free slide bearing
- Connection: hardened HOPPE solid profile spindle
- Base: steel for handle roses, nylon for escutcheons, supporting lugs
- Fixing: concealed, bolt-through, alternate, M5 thread screws for handle roses, multi-purpose screws for escutcheons

Article description			Keyhole	F1 Article no.	F9 Article no.			P.U.	O.C.
Handle set	40-45	8		3583053	3583176			1	10
				3583627	3583635			1	10
	40-45	8		3587521	3587564			1	4
Knob/handle set with knob 43L	40-45	8		3587636	3587695			1	4

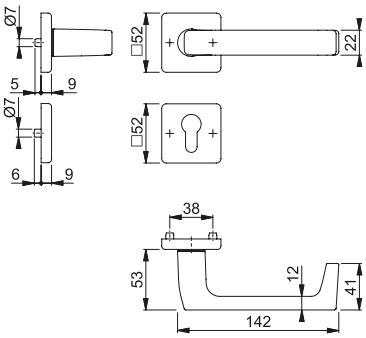

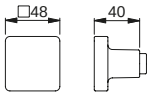

Knob 43L





Quick-Fit

1644/52KV/52KVS New

HOPPE aluminium handle set on rose with escutcheons for interior doors:
- Meets the requirements of **DIN EN 1906**: 37-0140A, handle set for commercial applications
- Bearing: loose door handles, non-handed spring cassettes, maintenance-free slide bearing
- Connection: **HOPPE Quick-Fit connection** with HOPPE solid spindle (spindle – receiver components)
- Base: nylon, supporting lugs
- Fixing: concealed, bolt-through, alternate, multi-purpose screws

Article description			Keyhole	F1 Article no.	F9 Article no.			P.U.	O.C.
Handle set	37-42	8		3575299	3575504			1	40
				3575803	3575811			1	20
	37-42	8 5-8		3651757	3651765			1	20
Knob/handle set with knob 43L	37-42	8		3587599	3587601			1	8

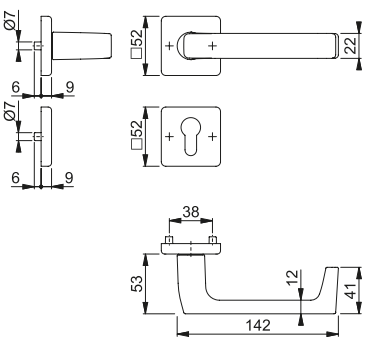

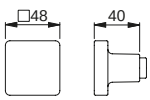

Knob 43L

duraplus®

For a product overview, finish chart and identification of the product ranges please refer to the back of the catalogue.





E1644F/52/52KVS New

HOPPE stainless steel handle set on rose with escutcheons for interior doors:
- Meets the requirements of **DIN EN 1906**: 47-0130U, handle set for commercial applications
- Bearing: fixed/movable door handles, HOPPE **Sertos** clip-in technology, maintenance-free slide bearing
- Connection: hardened HOPPE solid profile spindle
- Base: steel for handle roses, nylon for escutcheons, supporting lugs
- Fixing: concealed, bolt-through, alternate, M5 thread screws for handle roses, multi-purpose screws for escutcheons

Sertos

Article description			Keyhole	F69 Article no.				P.U.	O.C.
Handle set	40-45	8		3589367				1	10
				3589404				1	10
	40-45	8 5-8		3589412				1	4
Knob/handle set with knob E43	40-45	8		3590982				1	4

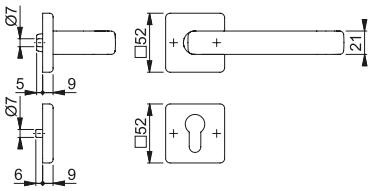

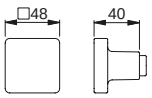

Knob E43





E1644Z/52KV/52KVS New

HOPPE stainless steel handle set on rose with escutcheons for interior doors:
- Meets the requirements of **DIN EN 1906**: 37-0140A, handle set for commercial applications
- Bearing: loose door handles, non-handed spring cassettes, maintenance-free slide bearing
- Connection: **HOPPE Quick-Fit connection** with HOPPE solid spindle (spindle – receiver components)
- Base: nylon, supporting lugs
- Fixing: concealed, bolt-through, alternate, multi-purpose screws

Quick-Fit

Article description			Keyhole	F69 Article no.				P.U.	O.C.
Handle set	37-42	8		3589324				1	10
				3589341				1	10
	37-42	8 5-8		3676381				1	10
Knob/handle set with knob E43	37-42	8		3590974				1	4

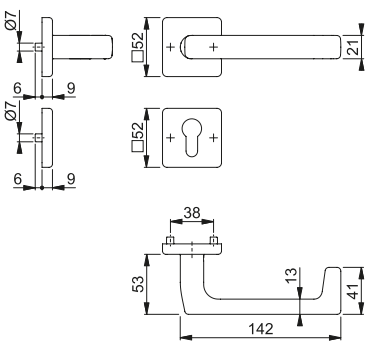

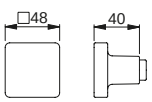

Knob E43



Quick-FitPlus

E1644Z/848 New

HOPPE Quick-FitPlus stainless steel handle set on flat rose without escutcheons for interior doors:
- Tested to **DIN EN 1906**: 37-0140U, handle set for commercial applications
- Bearing: loose door handles, maintenance-free slide bearing
- Connection: **HOPPE Quick-Fit connection** with HOPPE solid spindle (spindle – receiver components)
- Fixing: plug-in handle roses with supporting lugs
- Special feature: non-screw and tool-free fitting, 2 mm flat roses

Article description				F69 Article no.				P.U.	O.C.
Handle set on rose	35-45	8		**3589308**				1	10

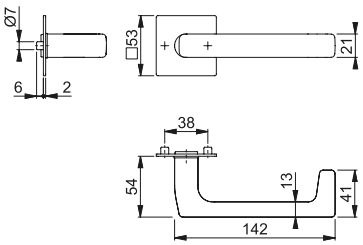

Detailed information on the HOPPE Quick-FitPlus technology and the special door preparation/drilling can be found in our manual: HOPPE – Handle of excellence. Basic information.

Roses with short supporting lugs and through-going supporting lugs (available on request) can be fit with a spring cassette as an option: Z-RFL18 spring cassette and suitable drilling jig for door preparation see page 299.



Quick-FitPlus

E848S-SK

HOPPE Quick-FitPlus stainless steel flat escutcheon pair for interior doors:
- Fixing: self-adhesive escutcheons
- Special feature: non-screw and tool-free fitting, 2 mm flat escutcheons

Article description			Keyhole	F69 Article no.				P.U.	O.C.
Escutcheon, pair				**3189988**				5	25
				3189996				5	25
	35-45	5 8		**3190006**				2	10

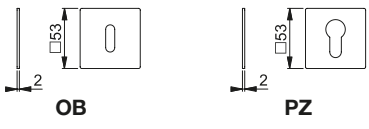

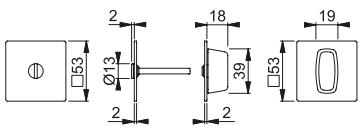



Detailed information on the HOPPE Quick-FitPlus technology can be found in our manual: HOPPE – Handle of excellence. Basic information.

On request, the escutcheons are available also with through-going supporting lugs.







Quick-Fit

M1623/843K/843KS

HOPPE brass handle set on rose with escutcheons for interior doors:
- Tested to **DIN EN 1906**: 37-0140A, handle set for commercial applications
- Bearing: loose door handles, non-handed spring cassettes, maintenance-free slide bearing
- Connection: **HOPPE Quick-Fit connection** with HOPPE solid spindle (receiver – receiver components)
- Base: nylon
- Fixing: concealed, multi-purpose screws

Article description			Keyhole	F41-R Article no.	F49-R Article no.	F71 Article no.	F77-R Article no.	P.U.	O.C.
Handle set (spindle – receiver handle)	37-52	8		3392484	3392513	3392441	3392548	1	10
Handle set*	62-74	8		**3392492**	3392521	3392468	3392556	1	10
Handle set (spindle – receiver handle)	38-48	8 5-8		3392505	3392530	3392476	3392564	1	10

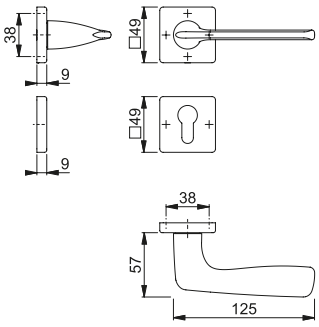

The Resista® guarantee applies to all finishes with the letter **R** in the finish key.

Resista®

*** Note:**
For door thicknesses different from the one shown in the table, please exchange the spindle.

To be used exclusively with **HOPPE spindles**.

Matching products for other applications, available upon request:



Secustik®

M0623/US943

Secustik® window handle
Finish shown: **F41-R**
Detailed information on the Secustik® technology can be found in our manual: HOPPE – Handle of excellence. Basic information.



Quick-FitPlus

M1623/848

HOPPE Quick-FitPlus brass handle set on flat rose without escutcheons for interior doors:
- Tested to **DIN EN 1906**: 37-0140U, handle set for commercial applications
- Bearing: loose door handles, maintenance-free slide bearing
- Connection: **HOPPE Quick-Fit connection** with HOPPE solid spindle (spindle – receiver components)
- Fixing: plug-in stainless steel handle roses with supporting lugs
- Special feature: non-screw and tool-free fitting, 2 mm flat roses

Article description				F42-R/F69 Article no.				P.U.	O.C.
Handle set on rose	35-45	8		**3429152**				1	10

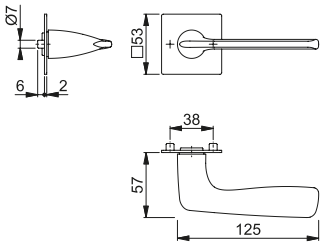

Detailed information on the HOPPE Quick-FitPlus technology and the special door preparation/drilling can be found in our manual: HOPPE – Handle of excellence. Basic information.

Roses with short supporting lugs and through-going supporting lugs (available on request) can be fit with a spring cassette as an option: Z-RFL18 spring cassette and suitable drilling jig for door preparation see page 299.



Quick-FitPlus

E848S-SK

HOPPE Quick-FitPlus stainless steel flat escutcheon pair for interior doors:
- Fixing: self-adhesive escutcheons
- Special feature: non-screw and tool-free fitting, 2 mm flat escutcheons

Article description			Keyhole	F69 Article no.				P.U.	O.C.
Escutcheon, pair				**3189988**				5	25
				3189996				5	25
	35-45	5 8		**3190006**				2	10

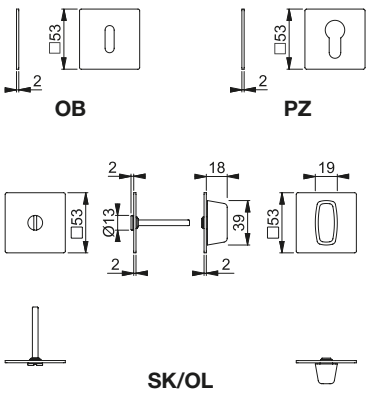

Detailed information on the HOPPE Quick-FitPlus technology can be found in our manual: HOPPE – Handle of excellence. Basic information.

On request, the escutcheons are available also with through-going supporting lugs.

HOPPE®
Handle of excellence.







Quick-Fit

1405/42K/42KS New

HOPPE aluminium handle set on rose with escutcheons for interior doors:
- Bearing: loose door handles, non-handed spring cassettes, maintenance-free slide bearing
- Connection: **HOPPE Quick-Fit connection** with HOPPE solid spindle (spindle – receiver components)
- Base: nylon
- Fixing: concealed, multi-purpose screws

Article description			Keyhole	F49/F9-2 Article no.				P.U.	O.C.
Handle set	35-45	8		3896017				1	10
	35-45	8		**3896025**				1	10
	40	8 5-8		3896033				1	10

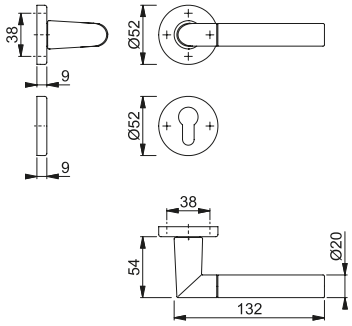



Los Angeles (Brass)





Quick-Fit

M1642/843K/843KS New

HOPPE brass handle set on rose with escutcheons for interior doors:
- Meets the requirements of **DIN EN 1906**: 37-0140A, handle set for commercial applications
- Bearing: loose door handles, non-handed spring cassettes, maintenance-free slide bearing
- Connection: **HOPPE Quick-Fit connection** with HOPPE solid spindle (receiver – receiver components)
- Base: nylon
- Fixing: concealed, multi-purpose screws

Article description			Keyhole	F41-R Article no.	F49-R Article no.			P.U.	O.C.
Handle set (spindle – receiver handle)	37-52	8		3719011	3719045			1	10
Handle set*	62-74	8		3719029	**3719053**			1	10
Handle set (spindle – receiver handle)	38-48	8 5-8		3719037	3719061			1	10

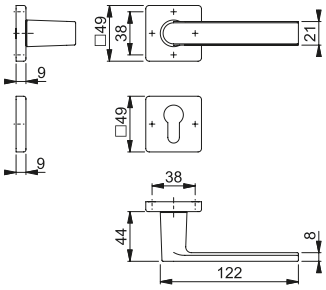

The Resista® guarantee applies to all finishes with the letter **R** in the finish key.

Resista®

*** Note:**
For door thicknesses different from the one shown in the table, please exchange the spindle.

To be used exclusively with **HOPPE spindles**.

Matching products for other applications, available upon request:



Secustik®

M0642/US943

Secustik® window handle
Finish shown: **F49-R**
Detailed information on the Secustik® technology can be found in our manual: HOPPE – Handle of excellence. Basic information.



Quick-Fit

M1642/844P/844PS

Handle set on narrow rose
Finish shown: **F49-R**
Detailed information on the HOPPE Quick-Fit connection can be found in our manual: HOPPE – Handle of excellence. Basic information.



Secustik®

PSK-M0642/US943

Secustik® window handle for parallel slide/tilt doors
Finish shown: **F49-R**
Detailed information on the Secustik® technology can be found in our manual: HOPPE – Handle of excellence. Basic information.

HS-M0642/419N/423

Lift/slide door set with shell
Finish shown: **F49-R**





Quick-Fit

M1642/42K/42KS New

HOPPE brass handle set on rose with escutcheons for interior doors:
- Meets the requirements of **DIN EN 1906**: 37-0140A, handle set for commercial applications
- Bearing: loose door handles, non-handed spring cassettes, maintenance-free slide bearing
- Connection: **HOPPE Quick-Fit connection** with HOPPE solid spindle (receiver – receiver components)
- Base: nylon
- Fixing: concealed, multi-purpose screws

Article description			Keyhole	F41-R Article no.	F49-R Article no.	F71 Article no.		P.U.	O.C.
Handle set (spindle – receiver handle)	37-52	8		3884323	3894231	3884331		1	10
Handle set*	62-74	8		3894257	**3894302**	3894281		1	10
Handle set (spindle – receiver handle)	38-47	8 5-8		3894353	3894370	3894361		1	10

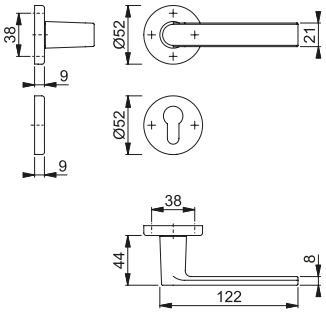

The Resista® guarantee applies to all finishes with the letter **R** in the finish key.

Resista®

*** Note:**
For door thicknesses different from the one shown in the table, please exchange the spindle.

To be used exclusively with **HOPPE spindles**.

Matching products for other applications, available upon request:



Secustik®

M0642/US910

Secustik® window handle
Finish shown: **F49-R**
Detailed information on the Secustik® technology can be found in our manual: HOPPE – Handle of excellence. Basic information.



Quick-FitPlus

M1642/848 New

HOPPE Quick-FitPlus brass handle set on flat rose without escutcheons for interior doors:
- Tested to **DIN EN 1906**: 37-0140U, handle set for commercial applications
- Bearing: loose door handles, maintenance-free slide bearing
- Connection: **HOPPE Quick-Fit connection** with HOPPE solid spindle (spindle – receiver components)
- Fixing: plug-in stainless steel handle roses with supporting lugs
- Special feature: non-screw and tool-free fitting, 2 mm flat roses

Article description				F41-R/F69 Article no.				P.U.	O.C.
Handle set on rose	35-45	8		**3734181**				1	10

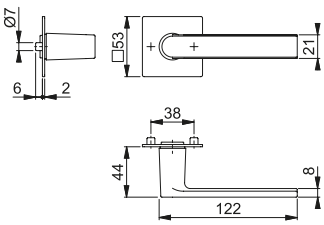

Detailed information on the HOPPE Quick-FitPlus technology and the special door preparation/drilling can be found in our manual: HOPPE – Handle of excellence. Basic information.

Roses with short supporting lugs and through-going supporting lugs (available on request) can be fit with a spring cassette as an option: Z-RFL18 spring cassette and suitable drilling jig for door preparation see page 299.



Quick-FitPlus

E848S-SK

HOPPE Quick-FitPlus stainless steel flat escutcheon pair for interior doors:
- Fixing: self-adhesive escutcheons
- Special feature: non-screw and tool-free fitting, 2 mm flat escutcheons

Article description			Keyhole	F69 Article no.				P.U.	O.C.
Escutcheon, pair				**3189988**				5	25
				3189996				5	25
	35-45	5 8		**3190006**				2	10

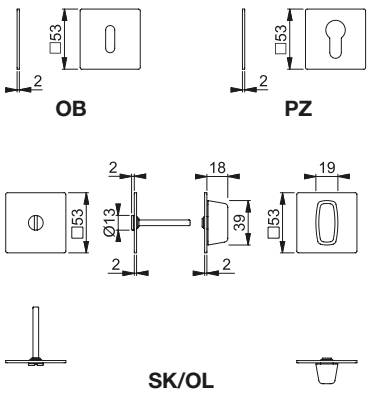

Detailed information on the HOPPE Quick-FitPlus technology can be found in our manual: HOPPE – Handle of excellence. Basic information.

On request, the escutcheons are available also with through-going supporting lugs.

HOPPE®
Handle of excellence.





Quick-Fit

199/42K

HOPPE aluminium handle set on rose without escutcheons for interior doors:
- Tested to **DIN EN 1906**: 37-0140A, handle set for commercial applications
- Bearing: loose door handles, non-handed spring cassettes, maintenance-free slide bearing
- Connection: **HOPPE Quick-Fit connection** with HOPPE solid spindle (spindle – receiver components)
- Base: nylon
- Fixing: concealed, multi-purpose screws

Article description				F1	F9			P.U.	O.C.
				Article no.	Article no.				
Handle set	35-45	8		**2813128**	2813291			1	10

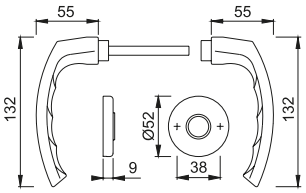

Matching products for other applications, available upon request:



Secustik®

099/US952

Secustik® window handle
Finish shown: **F1**
Detailed information on the Secustik® technology can be found in our manual: HOPPE – Handle of excellence. Basic information.

HOPPE®
Handle of excellence.



Marseille (Aluminium)





Quick-Fit

1138/42K/42KS

HOPPE aluminium handle set on rose with escutcheons for interior doors:
- Tested to **DIN EN 1906**: 37-0140A, handle set for commercial applications
- Bearing: loose door handles, non-handed spring cassettes, maintenance-free slide bearing
- Connection: **HOPPE Quick-Fit connection** with HOPPE solid spindle (spindle – receiver components)
- Base: nylon
- Fixing: concealed, multi-purpose screws

Article description			Keyhole	F1 Article no.	F4 Article no.	F9 Article no.		P.U.	O.C.
Handle set	37-47	8		2839432	2839547	2947484		1	10
				2839459	2839694	2947572		1	10
	67-77	8		2839483	2839707	on request		1	10
	37-47	8 5-8		2839504	2839715			1	10
	40	8 5-8				2947599		1	10

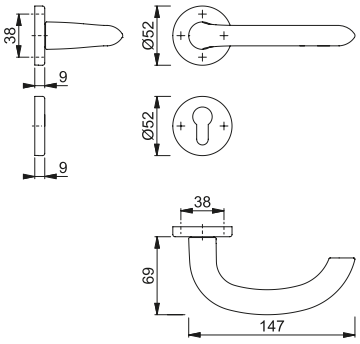

Matching products for other applications, available upon request:



Secustik®

0138/US956

Secustik® window handle
Finish shown: **F1**
Detailed information on the Secustik® technology can be found in our manual: HOPPE – Handle of excellence. Basic information.





Quick-Fit

E1138Z/42K/42KS

HOPPE stainless steel handle set on rose with escutcheons for interior doors:
- Tested to **DIN EN 1906**: 37-0140A, handle set for commercial applications
- Bearing: loose door handles, non-handed spring cassettes, maintenance-free slide bearing
- Connection: **HOPPE Quick-Fit connection** with HOPPE solid spindle (spindle – receiver components)
- Base: nylon
- Fixing: concealed, multi-purpose screws

Article description			Keyhole	F69 Article no.				P.U.	O.C.
Handle set	35-45	8		3058048				1	10
				3058161				1	10
	40-45	8 5-8		3058216				1	10

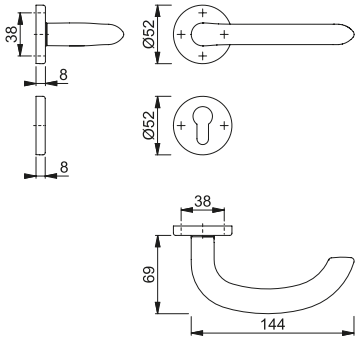

Matching products for other applications, available upon request:



Secustik®

E0138/US956

Secustik® window handle
Finish shown: **F69**
Detailed information on the Secustik® technology can be found in our manual: HOPPE – Handle of excellence. Basic information.



E1138Z/29N/29NS

HOPPE Quick-FitPlus stainless steel handle set on flat rose with escutcheons for interior doors:
- Tested to **DIN EN 1906**: 37-0140U, handle set for commercial applications
- Bearing: loose door handles, maintenance-free slide bearing
- Connection: **HOPPE Quick-Fit connection** with HOPPE solid spindle (spindle – receiver components)
- Fixing: plug-in stainless steel handle roses and escutcheons with through-going supporting lugs
- Special feature: non-screw and tool-free fitting, 2 mm flat roses

Article description			Keyhole	F69 Article no.				P.U.	O.C.
Handle set E29N/29NS	35-48	8		**on request**				1	10
Handle set on rose E29N	35-48	8		on request				1	10

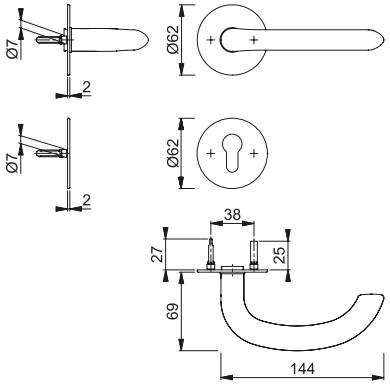

Detailed information on the HOPPE Quick-FitPlus technology and the special door preparation/drilling can be found in our manual: HOPPE – Handle of excellence. Basic information.

The rose can be fit with a spring cassette as an option: Z-RFL18 spring cassette and suitable drilling jig for door preparation see page 299.



E1138Z/29NR

HOPPE **Quick-FitPlus** stainless steel handle set on flat rose with emergency release/turn for interior doors:
- Tested to **DIN EN 1906**: 37-0140U, handle set for commercial buildings
- Bearing: loose door handles, maintenance-free slide bearing
- Connection: **HOPPE Quick-Fit connection** with HOPPE solid spindle (spindle – receiver components)
- Fixing: plug-in handle roses with locking function and through-going supporting lugs
- Special feature: non-screw and tool-free fitting, 2 mm flat roses, mortice lock case not required when using this set

Article description			Keyhole	F69 Article no.				P.U.	O.C.
Handle set on rose, with locking mechanism (inside)	35-45	8		**3842810**				1	10

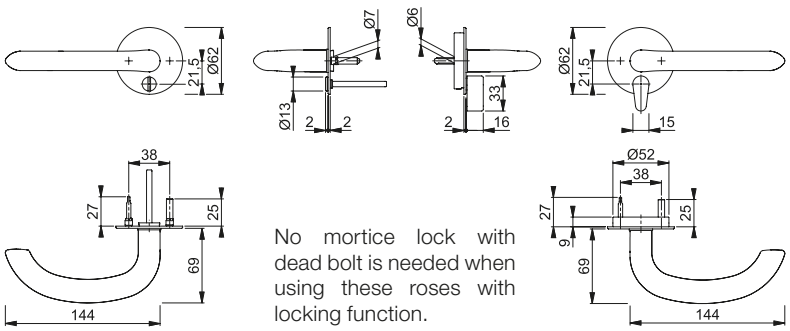

No mortice lock with dead bolt is needed when using these roses with locking function.

Detailed information on the HOPPE Quick-FitPlus technology and the special door preparation/drilling can be found in our manual: HOPPE – Handle of excellence. Basic information.

The rose can be fit with a spring cassette as an option: Z-RFL18 spring cassette and suitable drilling jig for door preparation see page 299.



Quick-FitPlus

E1138Z/849

HOPPE Quick-FitPlus stainless steel handle set on flat rose without escutcheons for interior doors:
- Tested to **DIN EN 1906**: 37-0140U, handle set for commercial applications
- Bearing: loose door handles, maintenance-free slide bearing
- Connection: **HOPPE Quick-Fit connection** with HOPPE solid spindle (spindle – receiver components)
- Fixing: plug-in stainless steel handle roses with supporting lugs
- Special feature: non-screw and tool-free fitting, 2 mm flat roses

Article description				F69 Article no.				P.U.	O.C.
Handle set on rose	35-45	8		**3189494**				1	10

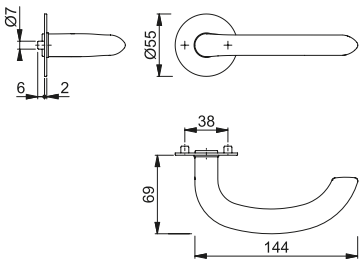

Detailed information on the HOPPE Quick-FitPlus technology and the special door preparation/drilling can be found in our manual: HOPPE – Handle of excellence. Basic information.

Roses with short supporting lugs and through-going supporting lugs (available on request) can be fit with a spring cassette as an option: Z-RFL18 spring cassette and suitable drilling jig for door preparation see page 299.



Quick-FitPlus

E849S-SK

HOPPE Quick-FitPlus stainless steel flat escutcheon pair for interior doors:
- Fixing: self-adhesive escutcheons
- Special feature: non-screw and tool-free fitting, 2 mm flat escutcheons

Article description			Keyhole	F69 Article no.				P.U.	O.C.
Escutcheon, pair				**3190022**				5	25
				3190031				5	25
	35-45	5 8		**3190049**				2	10

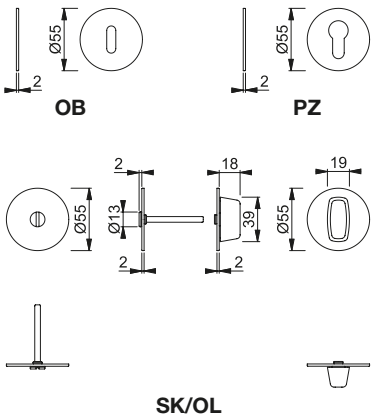

Detailed information on the HOPPE Quick-FitPlus technology can be found in our manual: HOPPE – Handle of excellence. Basic information.

On request, the escutcheons are available also with through-going supporting lugs.

HOPPE®
Handle of excellence.





Quick-Fit

1810/273P

HOPPE aluminium handle set on backplate for interior doors:
- Tested to **DIN EN 1906**: 37-0140A, handle set for commercial applications
- Bearing: loose door handles, non-handed spring cassettes, maintenance-free slide bearing
- Connection: **HOPPE Quick-Fit connection** with HOPPE solid spindle (spindle – receiver components)
- Fixing: visible, multi-purpose screws

Description			Keyhole/ distance	F1 Article no.	F4 Article no.	F9 Article no.		P.U.	O.C.
Handle set	37-42	8	72	3272909		3272917		1	30
	35-45	8	90	3276715	3277339			1	30
	37-42	8	72	3272925		3272933		1	20
	35-45	8	85	**3276740**	3277347			1	20
	37-42	8 8	78	3272941		3272968		1	20
Knob/handle set with knob 53	37-42	8	72	3272976		3272984		1	8

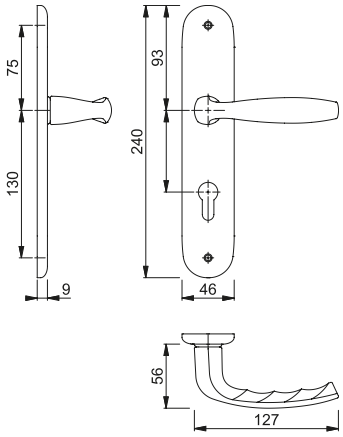

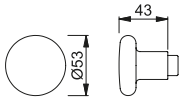

Knob 53





Quick-Fit

1810/42K/42KS

HOPPE aluminium handle set on rose with escutcheons for interior doors:
- Tested to **DIN EN 1906**: 37-0140A, handle set for commercial applications
- Bearing: loose door handles, non-handed spring cassettes, maintenance-free slide bearing
- Connection: **HOPPE Quick-Fit connection** with HOPPE solid spindle (spindle – receiver components)
- Base: nylon
- Fixing: concealed, multi-purpose screws

Description			Keyhole	F1 Article no.	F4 Article no.	F9 Article no.		P.U.	O.C.
Handle set	35-45	8		3292061	3292109	3292096		1	10
				3292133	3292150	3292141		1	10
	40	8 5-8		3292230	3292256	3292248		1	20

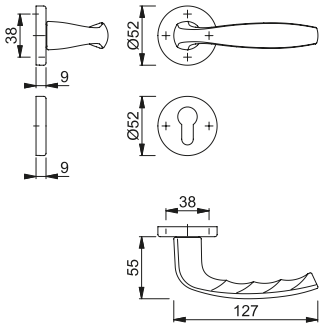

2

Matching products for other applications, available upon request:



Secustik®

0810/US10

Secustik® window handle with adjustable spindle
Finish shown: **F1**
Detailed information on the Secustik® technology and the adjustable spindle can be found in our manual: HOPPE – Handle of excellence. Basic information.



Secustik®

0810/US10

Secustik® window handle
Finish shown: **F1**
Detailed information on the Secustik® technology can be found in our manual: HOPPE – Handle of excellence. Basic information.



SecuDuplex

0810SVS/U10

Window handle with SecuDuplex
Finish shown: **F1**
Detailed information on SecuDuplex can be found in our manual: HOPPE – Handle of excellence. Basic information.



1810/3346

HOPPE aluminium handle set on narrow backplate for profile doors:
- Tested to **DIN EN 1906**: 26-0130U
- Bearing: fixed/movable door handles, maintenance-free slide bearing
- Connection: HOPPE solid spindle
- Base: stainless steel, supporting lugs
- Fixing: visible inside, bolt-trough, M6 thread screws, cover caps for screw heads

Description			Keyhole/ distance	F1 Article no.	F9 Article no.	F8707 Article no.	F9016 Article no.	P.U.	O.C.
Handle set	57-62	8	92	**3257338**	3257346	3257354	3257362	1	20
	67-72	8	92	3257371	3257389	3257397	3257400	1	20
Knob/handle set with knob 76G	57-62	8	92	3257426	3257434	3257442	3257451	1	10
	67-72	8	92	3257469	3257477	3257485	3257493	1	10
Pad/handle set with pad 554	57-62	8	92	3257506	3257522	3257531	3257549	1	10
	67-72	8	92	3257557	3257565	3257573	3257581	1	10

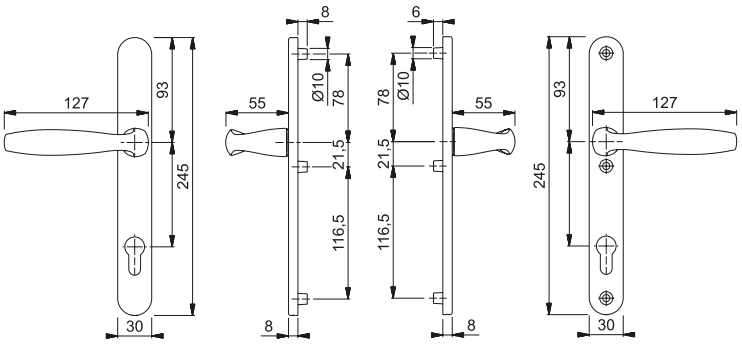

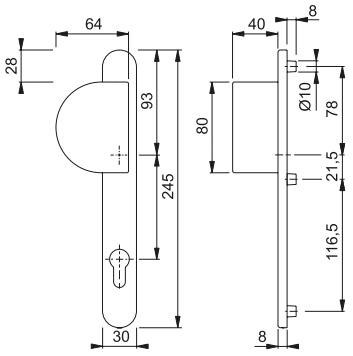

Pad 554

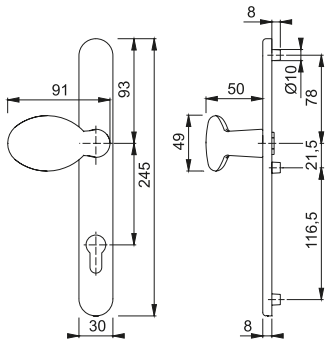

Knob 76G





Quick-Fit

1810/30P/30PS

HOPPE aluminium handle set on rose with escutcheons for profile doors:

- Tested to **DIN EN 1906**: 37-0140A
- Bearing: loose door handles, non-handed spring cassettes, maintenance-free slide bearing
- Connection: **HOPPE Quick-Fit connection** with HOPPE solid spindle (spindle – receiver components)
- Base: nylon
- Fixing: concealed, multi-purpose screws

Description			Keyhole	F1 Article no.	F9 Article no.			P.U.	O.C.
Handle set	55-65	8		**3281303**	3371245			1	10

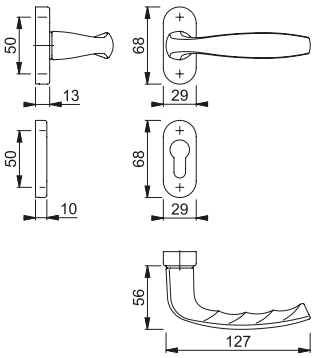

2







137/42K – 42KS

1) HOPPE aluminium handle set on rose without escutcheons for interior doors:
- Meets the requirements of **DIN EN 1906**: 37-0140A, handle set for commercial applications
- Bearing: loose door handles, non-handed spring cassettes, maintenance-free slide bearing
- Connection: HOPPE solid profile spindle (receiver – receiver components)
- Base: nylon
- Fixing: concealed, multi-purpose screws

2) HOPPE aluminium escutcheon pair for interior doors:
- Base: nylon
- Fixing: concealed, multi-purpose screws

Article description			Keyhole	F1 Article no.				P.U.	O.C.
1) Handle set on rose 137/42K	30-49	8		**2246186**				2	10
Handle 137, pair	30-49	8		523016				5	30
Rose 42K, pair				762712				10	100
2) Escutcheon 42KS, pair				762804				10	100
				762750				10	50
	45	8 5-8		1704608				5	20

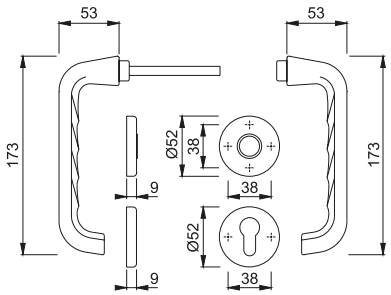

Further solution:
HCS® door handles.....224



138L/300PI

HOPPE aluminium handle set on backplate for interior doors:
- Bearing: sprung fixed/movable door handles, maintenance-free slide bearing
- Connection: HOPPE profile spindle
- Fixing: visible, multi-purpose screws

Article description			Keyhole	F1 Article no.	F9 Article no.			P.U.	O.C.
Set	30-59	8	without keyhole	**1885306**	1885331			1	18

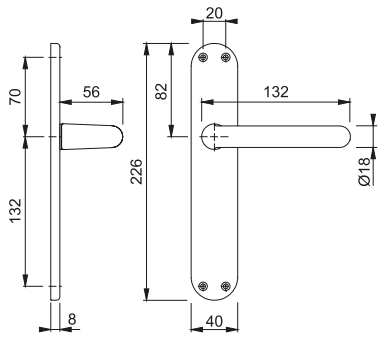

Further solution:
HCS® door handles.....224



138L/304L

HOPPE aluminium handle set on flat square backplate for interior doors:
- Bearing: sprung fixed/movable door handles, maintenance-free slide bearing
- Connection: HOPPE profile spindle
- Fixing: visible, multi-purpose screws

Article description			Keyhole/ Distance	F1 Article no.	F9 Article no.			P.U.	O.C.
Set	35-60	8	without keyhole	**564712**	564729			1	10
			72	1776601				1	10

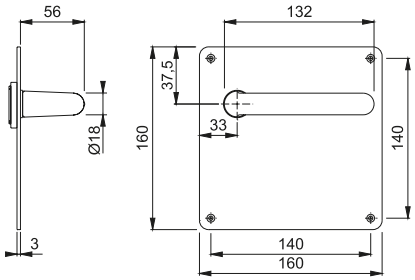

Further solution:
HCS® door handles.....224





Quick-Fit

138L/42K/42KS

HOPPE aluminium handle set on rose with escutcheons for interior doors:
- Tested to **DIN EN 1906**: 37-0140A, handle set for commercial applications
- Bearing: loose door handles, non-handed spring cassettes, maintenance-free slide bearing
- Connection: **HOPPE Quick-Fit connection** with HOPPE solid spindle (receiver – receiver components)
- Base: nylon
- Fixing: concealed, multi-purpose screws

Article description			Keyhole	F1 Article no.				P.U.	O.C.
Handle set (spindle – receiver handle)	35-45	8		3278999				1	10
Handle set*	35-45	8		**3279035**				1	10
Handle set (spindle – receiver handle)	40	8 5-8		3279019				1	10

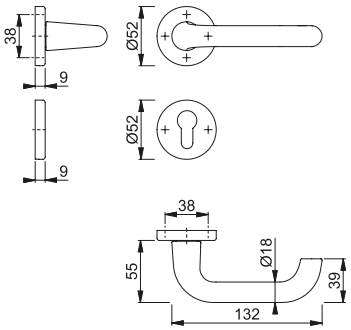

*** Note:**
For door thicknesses different from the one shown in the table, please exchange the spindle.

To be used exclusively with **HOPPE spindles**.

Further solution:
HCS® door handles.....224

Matching products for other applications, available upon request:



Secustik®

038/US956

Secustik® window handle
Finish shown: **F1**
Detailed information on the Secustik® technology can be found in our manual: HOPPE – Handle of excellence. Basic information.



Quick-Fit

E138Z/353FL

1) HOPPE stainless steel door handle pair for interior doors:
- Tested to **DIN EN 1906**: 37-0140A
- Connection: **HOPPE Quick-Fit connection** with HOPPE solid spindle (spindle – receiver components)
- Flange: for loose bearing

2) HOPPE stainless steel flat backplate pair for interior doors:
- Bearing: for loose door handles, maintenance-free slide bearing
- Fixing: visible, multi-purpose screws

Article description			Keyhole/ Distance	F69 Article no.				P.U.	O.C.
1) Handle E138Z, pair	35-45	8		**3289911**				5	50
2) Flat backplate E353FL, pair			without keyhole	602018				5	20
			72	**602001**				5	20
			92	653379				5	20

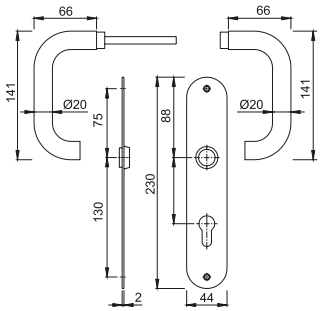



Quick-Fit

E138Z/355FL

1) HOPPE stainless steel door handle pair for interior doors:
- Connection: **HOPPE Quick-Fit connection** with HOPPE solid spindle (spindle – receiver components)
- Flange: for loose bearing

2) HOPPE stainless steel flat square backplate pair for interior doors:
- Bearing: for loose door handles, maintenance-free slide bearing
- Fixing: visible, multi-purpose screws

Article description			Keyhole/ Distance	F69 Article no.				P.U.	O.C.
1) Handle E138Z, pair	35-45	8		**3289911**				5	50
2) Flat square backplate E355FL, pair			without keyhole	626052				5	20
			72	**625826**				5	20
			85	626045				5	20

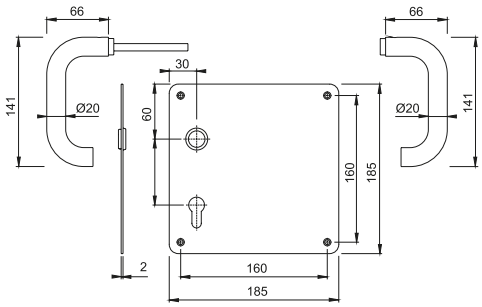



E138Z/42K/42KS

HOPPE stainless steel handle set on rose with escutcheons for interior doors:
- Tested to **DIN EN 1906**: 37-0140A, handle set for commercial applications
- Bearing: loose door handles, non-handed spring cassettes, maintenance-free slide bearing
- Connection: **HOPPE Quick-Fit connection** with HOPPE solid spindle (receiver – receiver components)
- Base: nylon
- Fixing: concealed, multi-purpose screws

Quick-Fit

Article description			Keyhole	F69 Article no.				P.U.	O.C.
Handle set (spindle – receiver handle)	35-45	8		3290171				1	10
				3290162				1	10
Handle set*	35-45	8		**3278921**				1	10
Handle set (spindle – receiver handle)	40-45	8 5-8		3290154				1	10

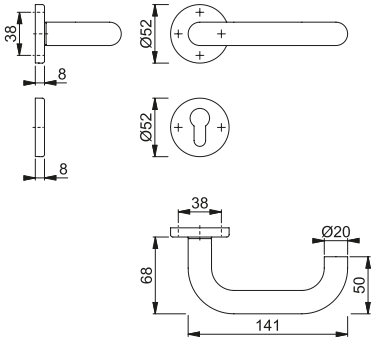

*** Note:**
For door thicknesses different from the one shown in the table, please exchange the spindle.

To be used exclusively with **HOPPE spindles**.

Matching products for other applications, available upon request:



Secustik®

E038/US956

Secustik® window handle
Finish shown: **F69**
Detailed information on the Secustik® technology can be found in our manual: HOPPE – Handle of excellence. Basic information.



Sertos

FS-E138F/353K

HOPPE fire-resistant stainless steel handle set on short backplate for interior doors:
- Tested to **DIN 18273** and **DIN EN 1906**: 47-B130U, handle set for commercial applications
- Bearing: fixed/movable door handles, HOPPE **Sertos** clip-in technology, maintenance-free slide bearing
- Connection: HOPPE profile spindle
- Base: steel, supporting lugs
- Fixing: concealed, bolt-through, M5 thread screws

Article description			Keyhole/ Distance	F69 Article no.				P.U.	O.C.
Fire-resistant handle set on short backplate F	40-65	9	72	**625895**				1	10

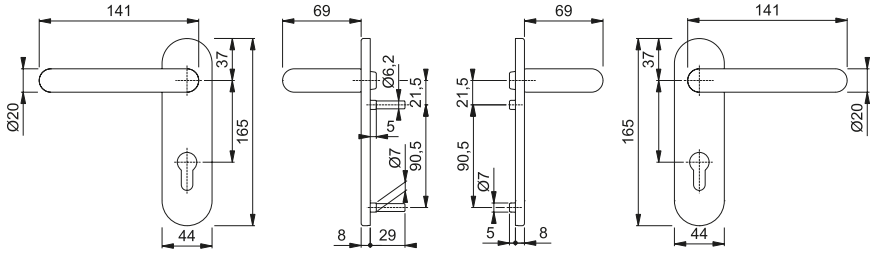





Sertos

FS-E138F/42/42S

HOPPE fire-resistant stainless steel handle set on rose with escutcheons for interior doors:
- Tested to **DIN 18273** and **DIN EN 1906**: 47-B130U, handle set for commercial applications
- Bearing: fixed/movable door handles, HOPPE **Sertos** clip-in technology, maintenance-free slide bearing
- Connection: HOPPE profile spindle
- Base: steel, supporting lugs
- Fixing: concealed, bolt-through, M4 thread screws

Article description			Keyhole	F69 Article no.				P.U.	O.C.
Fire-resistant handle set F	45-65	9		**545971**				1	10

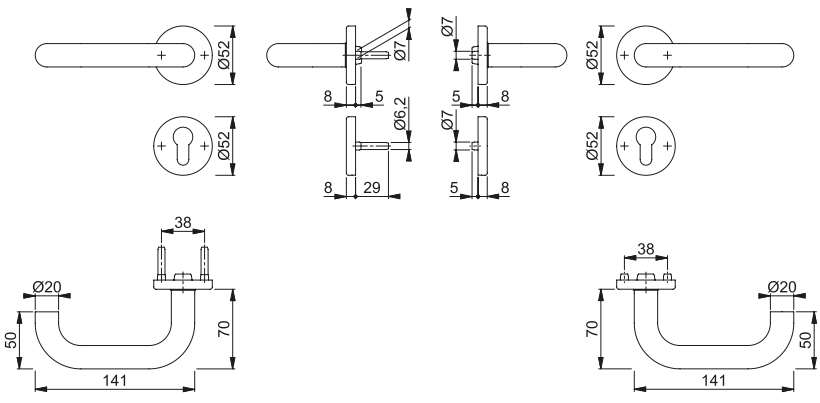

duraplus®







Quick-Fit

M1603/23K/23KS

HOPPE brass handle set on rose with escutcheons for interior doors:

- Tested to **DIN EN 1906**: 37-0140A, handle set for commercial applications
- Bearing: loose door handles, non-handed spring cassettes, maintenance-free slide bearing
- Connection: **HOPPE Quick-Fit connection** with HOPPE solid spindle (spindle – receiver components)
- Base: nylon
- Fixing: concealed, multi-purpose screws

Article description			Keyhole	F71 Article no.	F98-R Article no.			P.U.	O.C.
Handle set	30-56	8		2830585	2830622			1	10
				2830649	2830673			1	10
	40-49	8 5-8		2830729	2830745			1	10

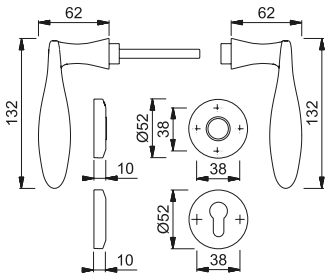

The Resista® guarantee applies to all finishes with the letter **R** in the finish key.

Resista®







Sertos

E1401F/42/42KVS New

HOPPE stainless steel handle set on rose with escutcheons for interior doors:
- Tested to **DIN EN 1906**: 47-0130U, handle set for commercial applications
- Bearing: fixed/movable door handles, HOPPE **Sertos** clip-in technology, maintenance-free slide bearing
- Connection: hardened HOPPE solid profile spindle
- Base: steel for handle roses, nylon for escutcheons, supporting lugs
- Fixing: concealed, bolt-through, alternate, M5 thread screws for handle roses, multi-purpose screws for escutcheons

Article description			Keyhole	F69 Article no.				P.U.	O.C.
Handle set	40-45	8		3409611				1	10
				3301141				1	10
	40-45	8 8		3358534				1	4

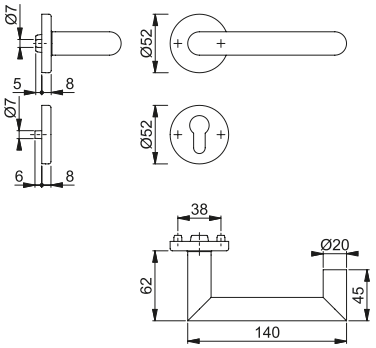







Quick-Fit

1140/42K/42KS

HOPPE aluminium handle set on rose with escutcheons for interior doors:
- Tested to **DIN EN 1906**: 37-0140A, handle set for commercial applications
- Bearing: loose door handles, non-handed spring cassettes, maintenance-free slide bearing
- Connection: **HOPPE Quick-Fit connection** with HOPPE solid spindle (spindle – receiver components)
- Base: nylon
- Fixing: concealed, multi-purpose screws

Article description			Keyhole	F1 Article no.	F9 Article no.			P.U.	O.C.
Handle set	37-47	8		2839061	2839117			1	10
				2839070	2839133			1	10
	67-77	8		2839109	2839141			1	10
	37-47	8 5-8		2839176	2839248			1	10

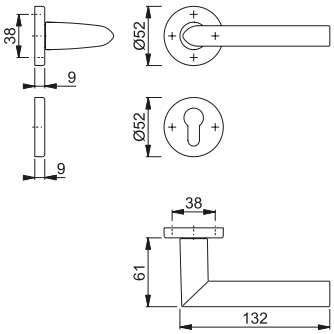

Matching products for other applications, available upon request:



Secustik®

0140/US956

Secustik® window handle
Finish shown: **F1**
Detailed information on the Secustik® technology can be found in our manual: HOPPE – Handle of excellence. Basic information.





Quick-Fit

E1140Z/42K/42KS

HOPPE stainless steel handle set on rose with escutcheons for interior doors:
- Tested to **DIN EN 1906**: 37-0140A, handle set for commercial applications
- Bearing: loose door handles, non-handed spring cassettes, maintenance-free slide bearing
- Connection: **HOPPE Quick-Fit connection** with HOPPE solid spindle (spindle – receiver components)
- Base: nylon
- Fixing: concealed, multi-purpose screws

Article description			Keyhole	F69 Article no.				P.U.	O.C.
Handle set	35-45	8		3058304				1	10
	65-75	8		**3058312**				1	10
	40-45	8 5-8		3058321				1	10

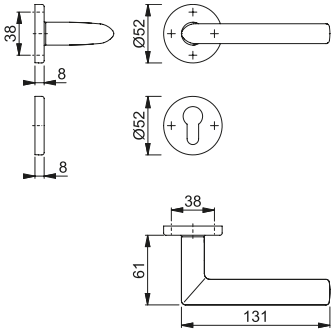

2

Matching products for other applications, available upon request:



Secustik®

E0140/US956

Secustik® window handle
Finish shown: **F69**
Detailed information on the Secustik® technology can be found in our manual: HOPPE – Handle of excellence. Basic information.



Quick-FitPlus

E1140Z/29N/29NS

HOPPE Quick-FitPlus stainless steel handle set on flat rose with escutcheons for interior doors:
- Tested to **DIN EN 1906**: 37-0140U, handle set for commercial applications
- Bearing: loose door handles, maintenance-free slide bearing
- Connection: **HOPPE Quick-Fit connection** with HOPPE solid spindle (spindle – receiver components)
- Fixing: plug-in stainless steel handle roses and escutcheons with through-going supporting lugs
- Special feature: non-screw and tool-free fitting, 2 mm flat roses

Article description			Keyhole	F69 Article no.				P.U.	O.C.
Handle set E29N/29NS	35-48	8		on request				1	10
				on request				1	10
Handle set on rose E29N	35-48	8		on request				1	10

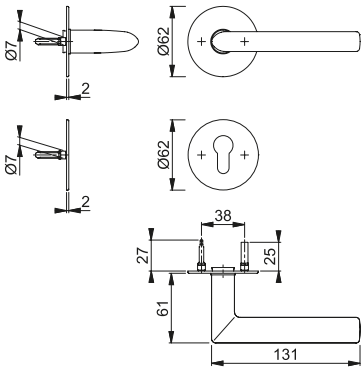

Detailed information on the HOPPE Quick-FitPlus technology and the special door preparation/drilling can be found in our manual: HOPPE – Handle of excellence. Basic information.

The rose can be fit with a spring cassette as an option: Z-RFL18 spring cassette and suitable drilling jig for door preparation see page 299.



Quick-FitPlus

E1140Z/29NR

HOPPE Quick-FitPlus stainless steel handle set on flat rose with emergency release/turn for interior doors:
- Tested to **DIN EN 1906**: 37-0140U, handle set for commercial buildings
- Bearing: loose door handles, maintenance-free slide bearing
- Connection: **HOPPE Quick-Fit connection** with HOPPE solid spindle (spindle – receiver components)
- Fixing: plug-in handle roses with locking function and through-going supporting lugs
- Special feature: non-screw and tool-free fitting, 2 mm flat roses, mortice lock case not required when using this set

Article description			Keyhole	F69 Article no.				P.U.	O.C.
Handle set on rose, with locking mechanism (inside)	38-48	8		**3842844**				1	10

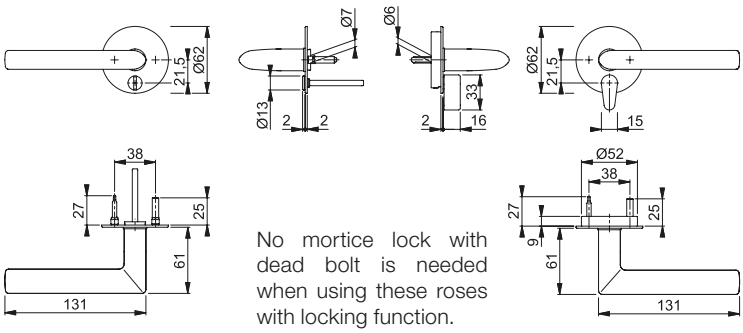

No mortice lock with dead bolt is needed when using these roses with locking function.

Detailed information on the HOPPE Quick-FitPlus technology and the special door preparation/drilling can be found in our manual: HOPPE – Handle of excellence. Basic information.

The rose can be fit with a spring cassette as an option: Z-RFL18 spring cassette and suitable drilling jig for door preparation see page 299.



Quick-FitPlus

E1140Z/848

HOPPE Quick-FitPlus stainless steel handle set on flat rose without escutcheons for interior doors:
- Tested to **DIN EN 1906**: 37-0140U, handle set for commercial applications
- Bearing: loose door handles, maintenance-free slide bearing
- Connection: **HOPPE Quick-Fit connection** with HOPPE solid spindle (spindle – receiver components)
- Fixing: plug-in handle roses with supporting lugs
- Special feature: non-screw and tool-free fitting, 2 mm flat roses

Article description				F69 Article no.				P.U.	O.C.
Handle set on rose	35-45	8		**3189734**				1	10

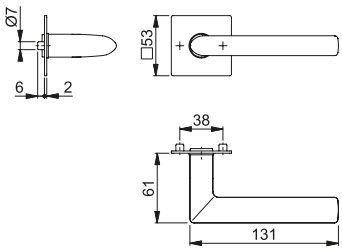

Detailed information on the HOPPE Quick-FitPlus technology and the special door preparation/drilling can be found in our manual: HOPPE – Handle of excellence. Basic information.

Roses with short supporting lugs and through-going supporting lugs (available on request) can be fit with a spring cassette as an option: Z-RFL18 spring cassette and suitable drilling jig for door preparation see page 299.



Quick-FitPlus

E848S-SK

HOPPE Quick-FitPlus stainless steel flat escutcheon pair for interior doors:
- Fixing: self-adhesive escutcheons
- Special feature: non-screw and tool-free fitting, 2 mm flat escutcheons

Article description			Keyhole	F69 Article no.				P.U.	O.C.
Escutcheon, pair				**3189988**				5	25
				3189996				5	25
	35-45	5 8		**3190006**				2	10

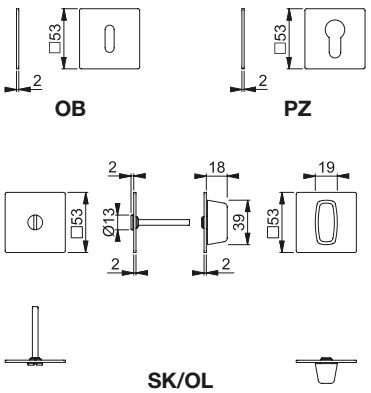

Detailed information on the HOPPE Quick-FitPlus technology can be found in our manual: HOPPE – Handle of excellence. Basic information.

On request, the escutcheons are available also with through-going supporting lugs.







Quick-Fit

1710/42K/42KS

HOPPE aluminium handle set on rose with escutcheons for interior doors:
- Tested to **DIN EN 1906**: 37-0140A, handle set for commercial applications
- Bearing: loose door handles, non-handed spring cassettes, maintenance-free slide bearing
- Connection: **HOPPE Quick-Fit connection** with HOPPE solid spindle (spindle – receiver components)
- Base: nylon
- Fixing: concealed, multi-purpose screws

Article description			Keyhole	F1 Article no.	F9 Article no.			P.U.	O.C.
Handle set	38-42	8		3112542	2919539			1	10
				2876794	2919854			1	10
	40	8 5-8		on request	2919547			1	10

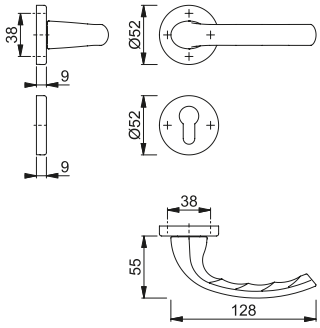

Matching products for other applications, available upon request:



0710/U26

Window handle
Finish shown: **F1**



Trondheim (Stainless steel)



E1430Z/42K/42KS

HOPPE stainless steel handle set on rose with escutcheons for interior doors:
- Tested to **DIN EN 1906**: 37-0140A, handle set for commercial applications
- Bearing: loose door handles, non-handed spring cassettes, maintenance-free slide bearing
- Connection: **HOPPE Quick-Fit connection** with HOPPE solid spindle (spindle – receiver components)
- Base: nylon
- Fixing: concealed, multi-purpose screws

Quick-Fit

Article description			Keyhole	F69 Article no.				P.U.	O.C.
Handle set	35-45	8		2826068				1	10
				2826084				1	10
	40-45	8 5-8		2826113				1	10

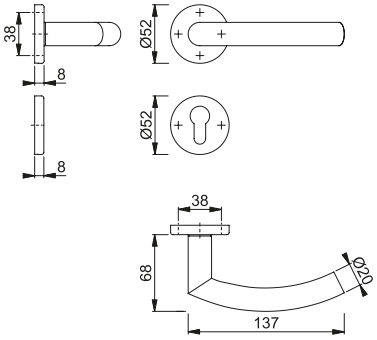

Matching products for other applications, available upon request:



Secustik®

E0430/US956

Secustik® window handle
Finish shown: **F69**
Detailed information on the Secustik® technology can be found in our manual: HOPPE – Handle of excellence. Basic information.





Quick-FitPlus

E1430Z/29N/29NS

HOPPE Quick-FitPlus stainless steel handle set on flat rose with escutcheons for interior doors:
- Tested to **DIN EN 1906**: 37-0140U, handle set for commercial applications
- Bearing: loose door handles, maintenance-free slide bearing
- Connection: **HOPPE Quick-Fit connection** with HOPPE solid spindle (spindle – receiver components)
- Fixing: plug-in stainless steel handle roses and escutcheons with through-going supporting lugs
- Special feature: non-screw and tool-free fitting, 2 mm flat roses

Article description			Keyhole	F69 Article no.				P.U.	O.C.
Handle set E29N/29NS	35-48	8		on request				1	10
				on request				1	10
Handle set on rose E29N	35-48	8		on request				1	10

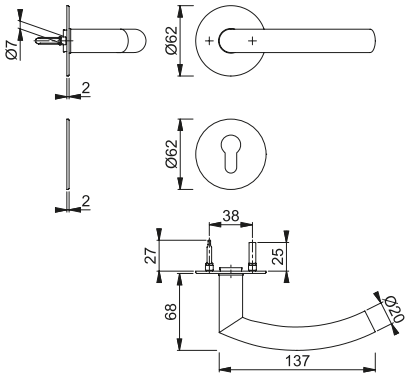

Detailed information on the HOPPE Quick-FitPlus technology and the special door preparation/drilling can be found in our manual: HOPPE – Handle of excellence. Basic information.

The rose can be fit with a spring cassette as an option: Z-RFL18 spring cassette and suitable drilling jig for door preparation see page 299.



Quick-FitPlus

E1430Z/29NR

HOPPE Quick-FitPlus stainless steel handle set on flat rose with emergency release/turn for interior doors:
- Tested to **DIN EN 1906**: 37-0140U, handle set for commercial buildings
- Bearing: loose door handles, maintenance-free slide bearing
- Connection: **HOPPE Quick-Fit connection** with HOPPE solid spindle (spindle – receiver components)
- Fixing: plug-in handle roses with locking function and through-going supporting lugs
- Special feature: non-screw and tool-free fitting, 2 mm flat roses, mortice lock case not required when using this set

Article description			Keyhole	F69 Article no.				P.U.	O.C.
Handle set on rose, with locking mechanism (inside)	38-48	8		**3842852**				1	10

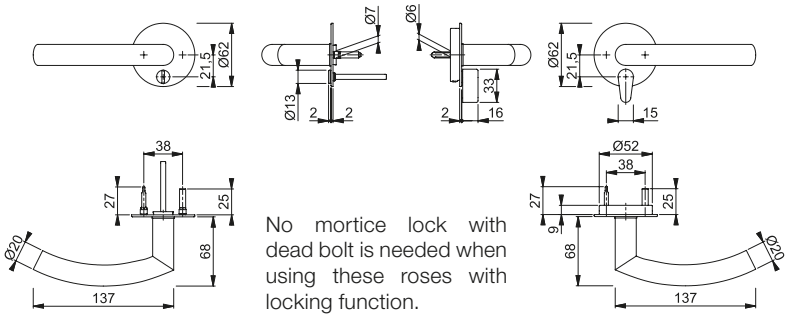

No mortice lock with dead bolt is needed when using these roses with locking function.

Detailed information on the HOPPE Quick-FitPlus technology and the special door preparation/drilling can be found in our manual: HOPPE – Handle of excellence. Basic information.

The rose can be fit with a spring cassette as an option: Z-RFL18 spring cassette and suitable drilling jig for door preparation see page 299.



Quick-FitPlus

E1430Z/848

HOPPE Quick-FitPlus stainless steel handle set on flat rose without escutcheons for interior doors:
- Tested to **DIN EN 1906**: 37-0140U, handle set for commercial applications
- Bearing: loose door handles, maintenance-free slide bearing
- Connection: **HOPPE Quick-Fit connection** with HOPPE solid spindle (spindle – receiver components)
- Fixing: plug-in handle roses with supporting lugs
- Special feature: non-screw and tool-free fitting, 2 mm flat roses

Article description				F69 Article no.				P.U.	O.C.
Handle set on rose	35-45	8		**3189769**				1	10

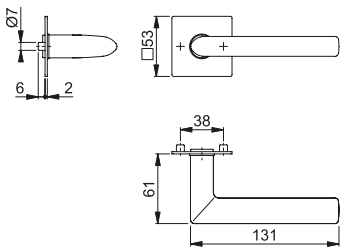

Detailed information on the HOPPE Quick-FitPlus technology and the special door preparation/drilling can be found in our manual: HOPPE – Handle of excellence. Basic information.

Roses with short supporting lugs and through-going supporting lugs (available on request) can be fit with a spring cassette as an option: Z-RFL18 spring cassette and suitable drilling jig for door preparation see page 299.



Quick-FitPlus

E848S-SK

HOPPE Quick-FitPlus stainless steel flat escutcheon pair for interior doors:
- Fixing: self-adhesive escutcheons
- Special feature: non-screw and tool-free fitting, 2 mm flat escutcheons

Article description			Keyhole	F69 Article no.				P.U.	O.C.
Escutcheon, pair				**3189988**				5	25
				3189996				5	25
	35-45	5 8		**3190006**				2	10

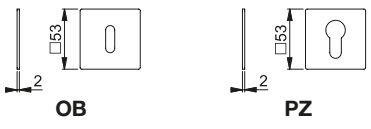

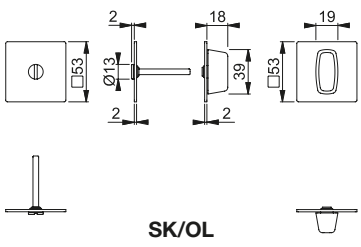

Detailed information on the HOPPE Quick-FitPlus technology can be found in our manual: HOPPE – Handle of excellence. Basic information.

On request, the escutcheons are available also with through-going supporting lugs.

HOPPE®
Handle of excellence.







139/42K – 42KS

1) HOPPE aluminium handle set on rose without escutcheons for interior doors:
- Meets the requirements of **DIN EN 1906**: 37-0140A, handle set for commercial applications
- Bearing: loose door handles, non-handed spring cassettes, maintenance-free slide bearing
- Connection: HOPPE solid profile spindle (receiver – receiver components)
- Base: nylon
- Fixing: concealed, multi-purpose screws

2) HOPPE aluminium escutcheon pair for interior doors:
- Base: nylon
- Fixing: concealed, multi-purpose screws

Article description			Keyhole	F1 Article no.				P.U.	O.C.
1) Handle set on rose 139/42K	30-49	8		**2246127**				2	10
Handle 139, pair	30-49	8		508679				5	30
Rose 42K, pair				762712				10	100
2) Escutcheon 42KS, pair				762804				10	100
				762750				10	50

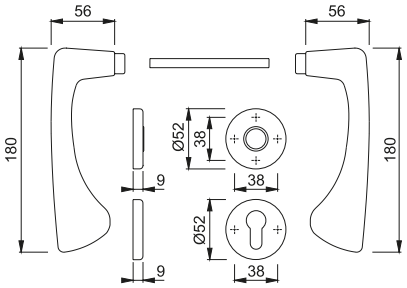







Quick-Fit

1510/42K/42KS

HOPPE aluminium handle set on rose with escutcheons for interior doors:
- Tested to **DIN EN 1906**: 37-0140A, handle set for commercial applications
- Bearing: loose door handles, non-handed spring cassettes, maintenance-free slide bearing
- Connection: **HOPPE Quick-Fit connection** with HOPPE solid spindle (spindle – receiver components)
- Base: nylon
- Fixing: concealed, multi-purpose screws

Article description			Keyhole	F1 Article no.	F9 Article no.			P.U.	O.C.
Handle set	35-45	8		2919432	on request			1	10
				2876751	on request			1	10
	40	8 5-8		2919512	on request			1	10

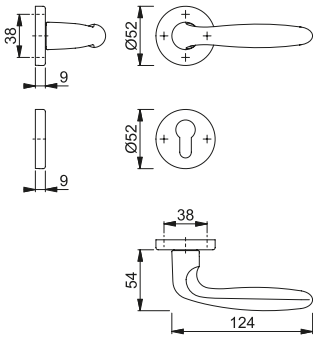

Matching products for other applications, available upon request:



0510/U26

Window handle
Finish shown: **F1**





Quick-Fit

E1800Z/42K/42KS

HOPPE stainless steel handle set on rose with escutcheons for interior doors:
- Tested to **DIN EN 1906**: 37-0140A, handle set for commercial applications
- Bearing: loose door handles, non-handed spring cassettes, maintenance-free slide bearing
- Connection: **HOPPE Quick-Fit connection** with HOPPE solid spindle (spindle – receiver components)
- Base: nylon
- Fixing: concealed, multi-purpose screws

Article description			Keyhole	F69 Article no.				P.U.	O.C.
Handle set	35-45	8		2826130				1	10
				2826148				1	10
	40-45	8 5-8		2826172				1	10

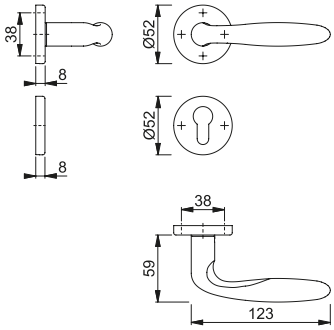

2

Matching products for other applications, available upon request:



Secustik®

E0800/US956

Secustik® window handle
Finish shown: **F69**
Detailed information on the Secustik® technology can be found in our manual: HOPPE – Handle of excellence. Basic information.



Quick-Fit

M151/265

HOPPE brass handle set on backplate for interior doors:
- Tested to **DIN EN 1906**: 37-0140A, handle set for commercial applications
- Bearing: loose door handles, non-handed spring cassettes, maintenance-free slide bearing
- Connection: **HOPPE Quick-Fit connection** with HOPPE solid spindle (spindle-receiver-components)
- Fixing: visible, multi-purpose screws

Article description			Keyhole/ Distance	F71 Article no.	F77-R Article no.			P.U.	O.C.
Handle set on backplate	32-48	8	90	2828717	2828768			1	10
			85	**2828725**	2828784			1	10
	66-82	8	85	2828741	2828792			1	10

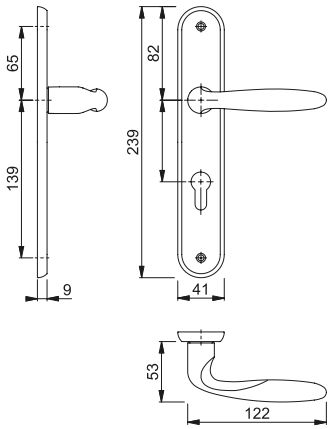

The Resista® guarantee applies to all finishes with the letter **R** in the finish key.

Resista®

Matching products for other applications, available upon request:



Secustik®

M051/US956

Secustik® window handle
Finish shown: **F71**
Detailed information on the Secustik® technology can be found in our manual: HOPPE – Handle of excellence. Basic information.





Quick-Fit

M151/42K/42KS

HOPPE brass handle set on rose with escutcheons for interior doors:
- Tested to **DIN EN 1906**: 37-0140A, handle set for commercial applications
- Bearing: loose door handles, non-handed spring cassettes, maintenance-free slide bearing
- Connection: **HOPPE Quick-Fit connection** with HOPPE solid spindle (spindle – receiver components)
- Base: nylon
- Fixing: concealed, multi-purpose screws

Article description			Keyhole	F41-R Article no.	F49-R Article no.	F71 Article no.		P.U.	O.C.
Handle set	32-48	8		2823991	2823967	2823959		1	10
				2824011	2823975	**2810728**		1	10
	66-82	8		2824054	2824046	2824038		1	10
	38-47	8 5-8		2829971	2829963	2829947		1	10

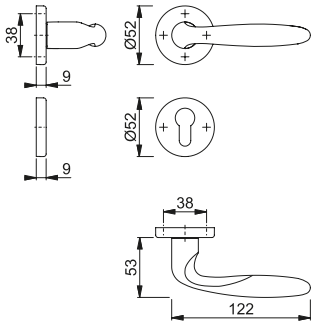

The Resista® guarantee applies to all finishes with the letter **R** in the finish key.

Resista®





Quick-Fit

M151/30P/30PS

HOPPE brass handle set on rose with escutcheons for profile doors:
- Tested to **DIN EN 1906**: 37-0140U
- Bearing: loose door handles, maintenance-free slide bearing
- Connection: **HOPPE Quick-Fit connection** with HOPPE solid spindle (spindle – receiver components)
- Base: nylon
- Fixing: concealed, multi-purpose screws

Article description			Keyhole	F41-R Article no.	F71 Article no.	F77-R Article no.		P.U.	O.C.
Handle set	32-48	8		2831297	2831271	**2831300**		1	4
	66-82	8		2831334	2831326	2831351		1	4

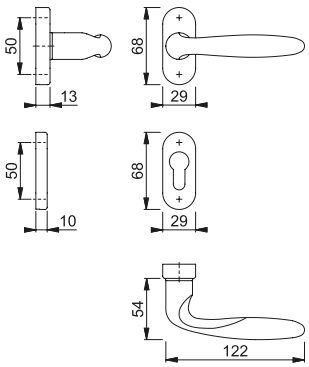

The Resista® guarantee applies to all finishes with the letter **R** in the finish key.

Resista®



Spring cassette available on page 300.

HOPPE®
Handle of excellence.







Quick-Fit

1515/42K/42KS

HOPPE aluminium handle set on rose with escutcheons for interior doors:
- Tested to **DIN EN 1906**: 37-0140A, handle set for commercial applications
- Bearing: loose door handles, non-handed spring cassettes, maintenance-free slide bearing
- Connection: **HOPPE Quick-Fit connection** with HOPPE solid spindle (spindle – receiver components)
- Base: nylon
- Fixing: concealed, multi-purpose screws

Article description			Keyhole	F1 Article no.	F9 Article no.			P.U.	O.C.
Handle set	37-47	8		2839969	2840249			1	10
				2839985	2840302			1	10
	67-77	8		2840011	2840345			1	10
	37-47	8 5-8		2840151	2840361			1	10

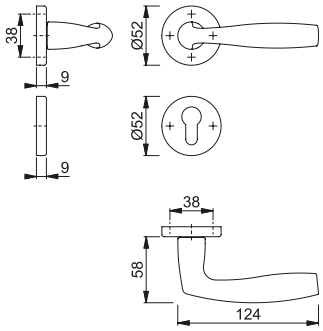

Matching products for other applications, available upon request:



Secustik®

0515/US956

Secustik® window handle
Finish shown: **F1**
Detailed information on the Secustik® technology can be found in our manual: HOPPE – Handle of excellence. Basic information.





Quick-Fit

M1515/23K/23KS

HOPPE brass handle set on rose with escutcheons for interior doors:
- Tested to **DIN EN 1906**: 37-0140A, handle set for commercial applications
- Bearing: loose door handles, non-handed spring cassettes, maintenance-free slide bearing
- Connection: **HOPPE Quick-Fit connection** with HOPPE solid spindle (spindle – receiver components)
- Base: nylon
- Fixing: concealed, multi-purpose screws

Article description			Keyhole	F41-R Article no.	F49-R Article no.	F71 Article no.	F72 Article no.	P.U.	O.C.
Handle set	32-47	8		2829453	2829461	2829349	2829357	1	10
				2829488	2829496	**2829381**	2829402	1	10
	64-79			2829517	2829533	2829429	2829437	1	10
	40-47	8		2830059	2830075	2830016	2830024	1	10

Article description			Keyhole	F73 Article no.	F77-R Article no.			P.U.	O.C.
Handle set	32-47	8		2829365	2829470			1	10
				2829411	2829509			1	10
	64-79			2829445	2829541			1	10
	40-47	8		2830041	2830083			1	10

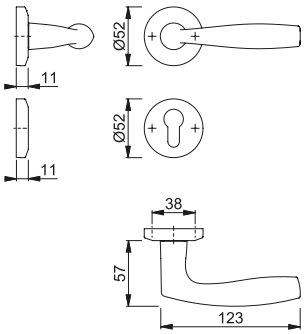

The Resista® guarantee applies to all finishes with the letter **R** in the finish key.

Resista®

Further solution:
Pull handle 269

Matching products for other applications, available upon request:



Secustik®

M0515/US956

Secustik® window handle
Finish shown: **F71**
Detailed information on the Secustik® technology can be found in our manual: HOPPE – Handle of excellence. Basic information.



M1515/29N/29NS

HOPPE Quick-FitPlus brass handle set on flat rose with escutcheons for interior doors:
- Tested to **DIN EN 1906**: 37-0140U, handle set for commercial applications
- Bearing: loose door handles, maintenance-free slide bearing
- Connection: **HOPPE Quick-Fit connection** with HOPPE solid spindle (spindle – receiver components)
- Fixing: plug-in stainless steel handle roses and escutcheons with through-going supporting lugs
- Special feature: non-screw and tool-free fitting, 2 mm flat roses

Article description			Keyhole	F42-R/F69 Article no.				P.U.	O.C.
Handle set E29N/29NS	35-48	8		**on request**				1	10
Handle set on rose E29N	35-48	8		on request				1	10

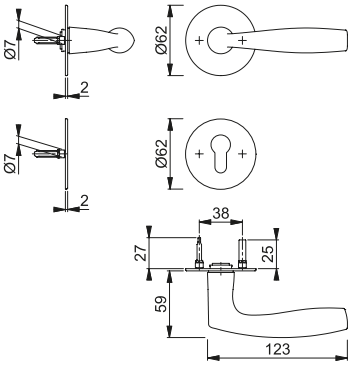

Further solution:
Pull handle 269

Detailed information on the HOPPE Quick-FitPlus technology and the special door preparation/drilling can be found in our manual: HOPPE – Handle of excellence. Basic information.

The rose can be fit with a spring cassette as an option: Z-RFL18 spring cassette and suitable drilling jig for door preparation see page 299.



M1515/29NR

HOPPE Quick-FitPlus brass handle set on flat rose with emergency release/turn for interior doors:
- Tested to **DIN EN 1906**: 37-0140U, handle set for commercial buildings
- Bearing: loose door handles, maintenance-free slide bearing
- Connection: **HOPPE Quick-Fit connection** with HOPPE solid spindle (spindle – receiver components)
- Fixing: plug-in stainless steel handle roses with locking function and through-going supporting lugs
- Special feature: non-screw and tool-free fitting, 2 mm flat roses, mortice lock case not required when using this set

Article description			Keyhole	F42-R/F69 Article no.				P.U.	O.C.
Handle set on rose, with locking mechanism (inside)	38-48	8		**3854298**				1	10

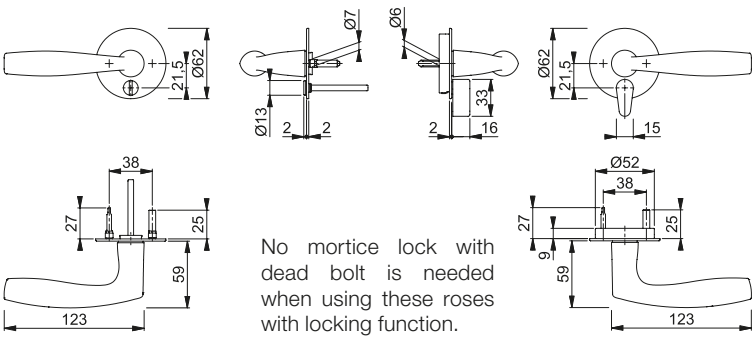

No mortice lock with dead bolt is needed when using these roses with locking function.

Detailed information on the HOPPE Quick-FitPlus technology and the special door preparation/drilling can be found in our manual: HOPPE – Handle of excellence. Basic information.

The rose can be fit with a spring cassette as an option: Z-RFL18 spring cassette and suitable drilling jig for door preparation see page 299.



Quick-FitPlus

M1515/849

HOPPE Quick-FitPlus brass handle set on flat rose without escutcheons for interior doors:
- Tested to **DIN EN 1906**: 37-0140U, handle set for commercial applications
- Bearing: loose door handles, maintenance-free slide bearing
- Connection: **HOPPE Quick-Fit connection** with HOPPE solid spindle (spindle – receiver components)
- Fixing: plug-in stainless steel handle roses with supporting lugs
- Special feature: non-screw and tool-free fitting, 2 mm flat roses

Article description				F42-R/F69 Article no.				P.U.	O.C.
Handle set on rose	35-45	8		**3201182**				1	10

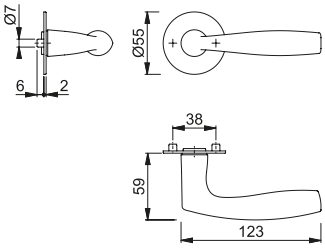

Further solution:
Pull handle 269

Detailed information on the HOPPE Quick-FitPlus technology and the special door preparation/drilling can be found in our manual: HOPPE – Handle of excellence. Basic information.

Roses with short supporting lugs and through-going supporting lugs (available on request) can be fit with a spring cassette as an option: Z-RFL18 spring cassette and suitable drilling jig for door preparation see page 299.



Quick-FitPlus

E849S-SK

HOPPE Quick-FitPlus stainless steel flat escutcheon pair for interior doors:
- Fixing: self-adhesive escutcheons
- Special feature: non-screw and tool-free fitting, 2 mm flat escutcheons

Article description			Keyhole	F69 Article no.				P.U.	O.C.
Escutcheon, pair				**3190022**				5	25
				3190031				5	25
	35-45	5 8		**3190049**				2	10

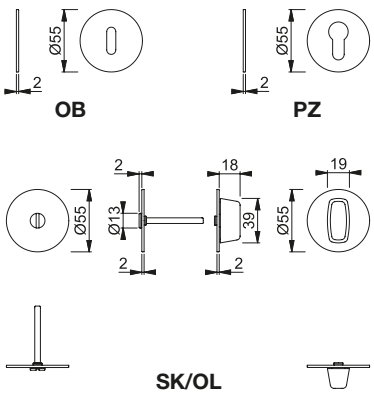

Detailed information on the HOPPE Quick-FitPlus technology can be found in our manual: HOPPE – Handle of excellence. Basic information.

On request, the escutcheons are available also with through-going supporting lugs.





53H/42K

HOPPE aluminium knob (pad) on rose for entrance doors (exterior):
- Bearing: loose knob, with thread
- Connection: thread adapter
- Base: nylon
- Fixing: concealed, one-sided from outside, for multi-purpose screws, fixing system for knobs (pads) on roses

Article description			Thread	F1	F4			P.U.	O.C.
				Article no.	Article no.				
Knob on rose, piece			M12	**814787**	814817			2	12

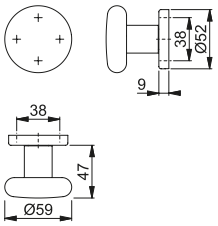



53H/60

HOPPE aluminium knob (pad) on rose for entrance doors (exterior):
- Bearing: loose knob (pad) with thread
- Connection: via threaded rod
- Fixing: concealed, from inside, M8 threaded rod with cap nut

Article description			Thread	F1	F4			P.U.	O.C.
				Article no.	Article no.				
Knob on rose, piece			M8	691661	**518074**			2	12

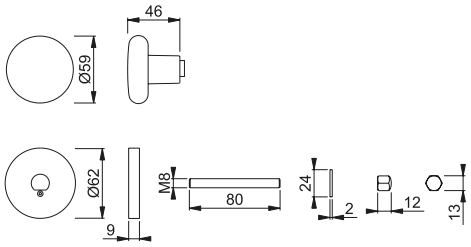



53S/42K

HOPPE aluminium knob (pad) on rose for entrance doors (exterior):
- Bearing: loose knob, with thread
- Connection: thread adapter
- Base: nylon
- Fixing: concealed, one-sided from outside, for multi-purpose screws, fixing system for knobs (pads) on roses

Article description			Thread	F1	F4			P.U.	O.C.
				Article no.	Article no.				
Knob on rose, piece			M12	**814961**	814978			2	12

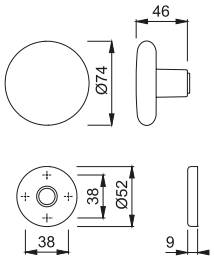



60L/42K

HOPPE aluminium knob (pad) on rose for entrance doors (exterior):
- Bearing: loose knob, with thread
- Connection: thread adapter
- Base: nylon
- Fixing: concealed, one-sided from outside, for multi-purpose screws, fixing system for knobs (pads) on roses

Article description			Thread	F1	F4			P.U.	O.C.
				Article no.	Article no.				
Knob on rose, piece			M12	**815074**	814206			2	12

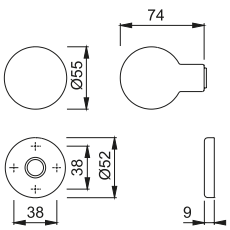



63-75/42K

HOPPE aluminium knob (pad) on rose for entrance doors (exterior):
- Bearing: loose knob, with thread
- Connection: thread adapter
- Base: nylon
- Fixing: concealed, one-sided from outside, for multi-purpose screws, fixing system for knobs (pads) on roses

Article description			Thread	F1 Article no.	F4 Article no.			P.U.	O.C.
Knob on rose, piece			M12	2047671	**814299**			2	12

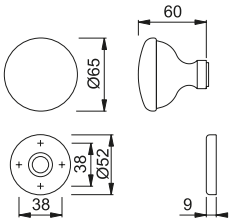



84/42K – 84H/42K

1) HOPPE aluminium knob (pad) receiver-component for reinforced entrance doors (exterior):
- Bearing: loose knob (pad), with thread and spindle hole
- Connection: for HOPPE FDW-spindles (fixed) and HOPPE profile spindles (movable)

2) HOPPE aluminium knob (pad) on rose without escutcheon for entrance doors:
- Bearing: movable or fixed knob (pad) with thread
- Connection: for HOPPE expanding spindle or HOPPE FDW-spindles
- Base: nylon
- Fixing: concealed, for multi-purpose screws

Article description		⊡	Thread	F1 Article no.	F4 Article no.			P.U.	O.C.
1) Loose knob 84, piece		8	M10	2122749	**2122757**			2	12
1) Loose knob 84H, piece		8	M10	2125579	2125587			2	12
2) 84/42K knob fixed on rose or loose, piece		8	M10	2124357	**2125000**			2	12
2) 84H/42K knob fixed on rose or loose, piece		8	M10	2125536	2125544			2	12

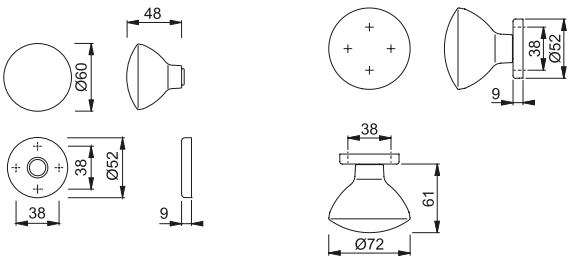

84/42K **84H/42K**



E50/42

HOPPE stainless steel knob (pad) on rose for entrance doors (exterior):
- Bearing: fixed knob (pad)
- Base: steel, supporting lugs
- Fixing: concealed, from inside, for M5 thread screws

Article description				F69 Article no.				P.U.	O.C.
Knob on rose, piece				**818761**				2	12

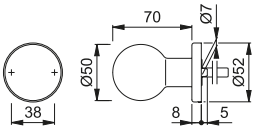



E58/42

HOPPE stainless steel knob (pad) on rose for entrance doors (exterior):
- Bearing: fixed knob (pad)
- Base: steel, supporting lugs
- Fixing: concealed, from inside, for M5 thread screws

Article description				F69 Article no.				P.U.	O.C.
Knob on rose, piece				**817979**				2	12

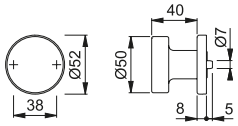



E50G/55

HOPPE stainless steel knob (pad) on rose for profile doors:
- Bearing: fixed cranked knob (pad)
- Connection: for HOPPE FDW solid profile spindle
- Base: zamak
- Fixing: concealed, plastic dowels (order screws for plastic dowels, fixing nuts for aluminium doors or expanding lugs for PVC doors separately)

Article description				F69 Article no.				P.U.	O.C.
Knob fixed on rose (with FDW-solid profile spindle), piece	32-48	8		2159120				2	12
Knob fixed on rose, piece				**3165345**				2	12

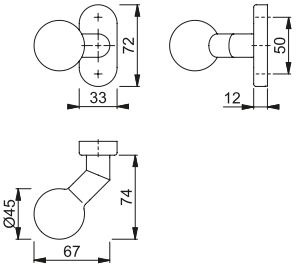



M63/42K

HOPPE brass knob (pad) on rose for entrance doors:
- Bearing: movable or fixed knob (pad) with thread
- Connection: for HOPPE expanding spindle or HOPPE FDW-spindles
- Base: nylon
- Fixing: concealed, for multi-purpose screws

Article description			Thread	F41-R Article no.	F71 Article no.	F73 Article no.	F77-R Article no.	P.U.	O.C.
Knob on rose, piece		8	M10	**1904175**	1904116	2404842	1904183	2	12

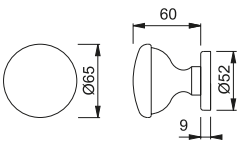

The Resista® guarantee applies to all finishes with the letter **R** in the finish key.

Resista®



M81H/42

HOPPE brass knob (pad) on rose for entrance doors:
- Bearing: fixed knob (pad)
- Fixing: concealed, multi-purpose screws

Article description				F41-R	F71	F73	F77-R	P.U.	O.C.
				Article no.	Article no.	Article no.	Article no.		
Knob on rose, piece				3055621	3055630	3055648	**3055656**	2	12

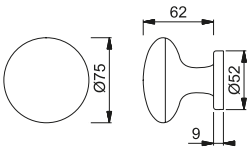

Included fixing systems for wooden doors:



The Resista® guarantee applies to all finishes with the letter **R** in the finish key.

Resista®



M84/42K

HOPPE brass knob (pad) on rose for entrance doors:
- Bearing: movable or fixed knob (pad) with thread
- Connection: for HOPPE expanding spindle or HOPPE FDW-spindles
- Base: nylon
- Fixing: concealed, for multi-purpose screws

Article description			Thread	F41-R	F71	F77-R		P.U.	O.C.
				Article no.	Article no.	Article no.			
Knob on rose, cpiece		8	M10	2124824	**2124816**	2229765		2	12

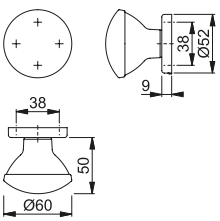

The Resista® guarantee applies to all finishes with the letter **R** in the finish key.

Resista®

Interior door handles





consistenty good value duranorm®





E1433Z/17K/17KS New

HOPPE stainless steel handle set on rose with escutcheons for interior doors:
- Bearing: sprung fixed/movable door handles, maintenance-free slide bearing
- Connection: HOPPE profile spindle
- Base: nylon
- Fixing: concealed, multi-purpose screws

Article description			Keyhole	F69 Article no.				P.U.	O.C.
Handle set	29-70	8		3887209				2	20
				3887217				2	20
	38-51	8 5-8		3887428				2	20

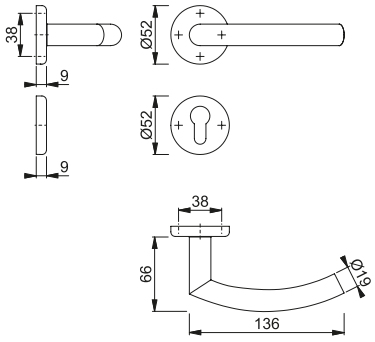





E1388Z/17K/17KS New

HOPPE stainless steel handle set on rose with escutcheons for interior doors:
- Bearing: sprung fixed/movable door handles, maintenance-free slide bearing
- Connection: HOPPE profile spindle
- Base: nylon
- Fixing: concealed, multi-purpose screws

Article description			Keyhole	F69 Article no.				P.U.	O.C.
Handle set	29-70	8		3882344				2	20
				3882352				2	20
	38-51	8 5-8		3883697				2	20

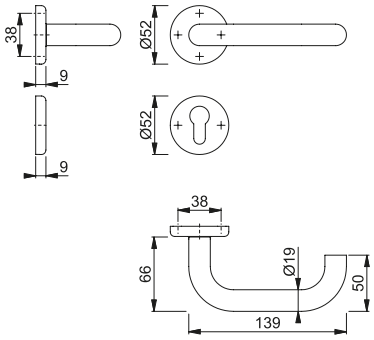





E1388Z/23P/23PS New

HOPPE stainless steel handle set on rose with escutcheons for profile doors:
- Bearing: loose door handles, maintenance-free slide bearing
- Connection: HOPPE profile spindle (receiver – receiver components)
- Base: nylon
- Fixing: concealed, for multi-purpose screws

Article description			Keyhole	F69 Article no.				P.U.	O.C.
Handle set	40-81	8		**3882395**				2	8

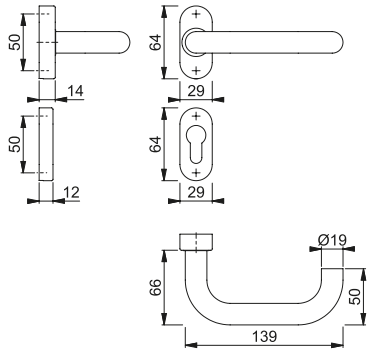



1117/202SP

HOPPE aluminium handle set on backplate for interior doors:
- Bearing: loose door handles, maintenance-free slide bearing
- Connection: HOPPE profile spindle (spindle – receiver components)
- Fixing: visible, multi-purpose screws

Article description			Keyhole/ Distance	F1 Article no.	F2 Article no.	F4 Article no.		P.U.	O.C.
Handle set on backplate	30-49	8	90	2539077	2540449	2540650		50	50
	27-47	8	85	2623471	**2623498**			20	20
	37-42	8 5-8	90	2539229	2540481	2540705		20	20

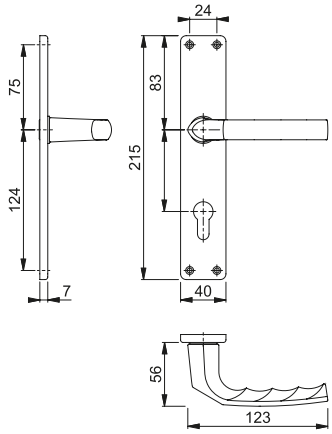





1117/88K/88KS

HOPPE aluminium handle set on rose with escutcheons for interior doors:
- Bearing: loose door handles, maintenance-free slide bearing
- Connection: HOPPE profile spindle (spindle – receiver components)
- Base: nylon
- Fixing: concealed, multi-purpose screws

Article description			Keyhole	F1 Article no.	F2 Article no.	F4 Article no.		P.U.	O.C.
Handle set	30-49	8		2546664	2546681	2546701		10	10
				2546672	**2546699**	2546710		10	10
	45	8 5-8		2546744	on request	2546761		10	10

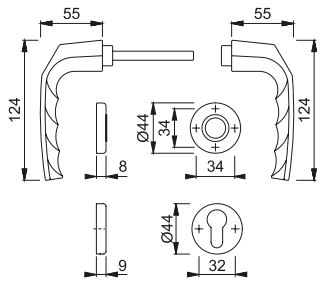



1767/2705

HOPPE aluminium handle set on backplate for interior doors:
- Bearing: sprung fixed/movable door handles, maintenance-free slide bearing
- Connection: HOPPE solid spindle
- Fixing: visible, multi-purpose screws

Article description			Keyhole/ Distance	F33-1 Article no.	F271* Article no.			P.U.	O.C.
Handle set on backplate	30-55	8	85	3817518	**3817462**			10	10

***** Suitable for interior applications only.

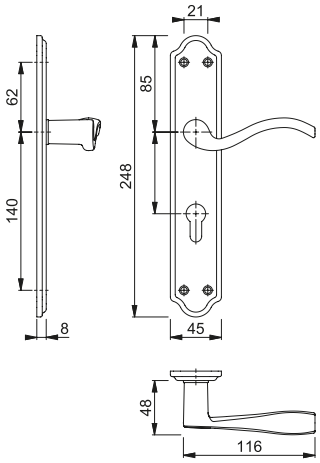

2



1107/267

HOPPE aluminium handle set on short backplate for interior doors:
- Bearing: fixed/movable door handles, maintenance-free slide bearing
- Connection: HOPPE solid spindle
- Fixing: visible, multi-purpose screws

Article description			Keyhole/ Distance	F1 Article no.				P.U.	O.C.
Handle set on backplate	32-50	8	60	**3802527**				25	25

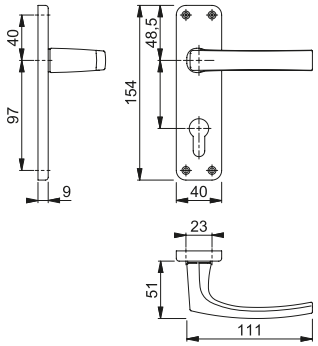





1107/17K – 17KS

1) HOPPE aluminium handle set on rose with escutcheons for interior doors:
- Bearing: sprung fixed/movable door handles, maintenance-free slide bearing
- Connection: HOPPE profile spindle
- Base: nylon
- Fixing: concealed, multi-purpose screws

2) HOPPE aluminium escutcheon pair for interior doors:
- Base: nylon
- Fixing: concealed, multi-purpose screws

Article description			Keyhole	F1 Article no.	F249 Article no.	F271* Article no.		P.U.	O.C.
1) Handle set on rose 1107/17K	30-44	8		**3802261**	3836831	3836840		20	20
2) Escutcheon 17KS, pair				3481479	3848111	3848162		50	50
				3481428	3848082	3848154		50	50

***** Suitable for interior applications only.

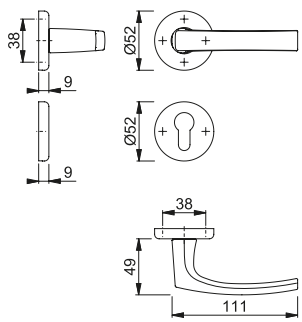





1124/843K/843KS New

HOPPE aluminium handle set on rose with escutcheons for interior doors:
- Bearing: sprung fixed/movable door handles, maintenance-free slide bearing
- Connection: HOPPE profile spindle
- Base: nylon
- Fixing: concealed, multi-purpose screws

Article description			Keyhole	F94-1 Article no.	F249 Article no.			P.U.	O.C.
Handle set	36-75	8		3796753	3796788			20	20
				3796761	3796796			20	20
	39-48	8 5-8		3796770	3796809			20	20

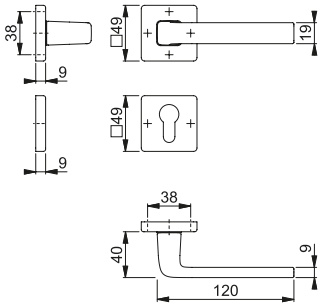

Matching products for other applications, available upon request:



0124/U35

Window handle
Finish shown: **F94-1**



1124/35P/35PS

Handle set on rose
Finish shown: **F94-1**





1124/24K/24KS New

HOPPE aluminium handle set on rose with escutcheons for interior doors:
- Bearing: sprung fixed/movable door handles, maintenance-free slide bearing
- Connection: HOPPE profile spindle
- Base: nylon
- Fixing: concealed, multi-purpose screws

Article description			Keyhole	F94-1 Article no.	F249 Article no.	F271* Article no.		P.U.	O.C.
Handle set	37-76	8		3679451	3795620	3795591		20	20
				3679477	3795638	3795603		20	20
	39-48	8 5-8		3795582	3795648	3795611		20	20

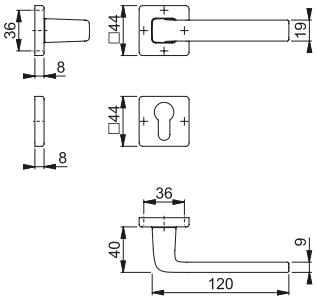

* Suitable for interior applications only.





E1555Z/17K/17KS New

HOPPE stainless steel handle set on rose with escutcheons for interior doors:
- Bearing: sprung fixed/movable door handles, maintenance-free slide bearing
- Connection: HOPPE profile spindle
- Base: nylon
- Fixing: concealed, multi-purpose screws

Article description			Keyhole	F69 Article no.				P.U.	O.C.
Handle set	29-70	8		3882361				2	20
				3882379				2	20
	38-51	8 5-8		3883726				2	20

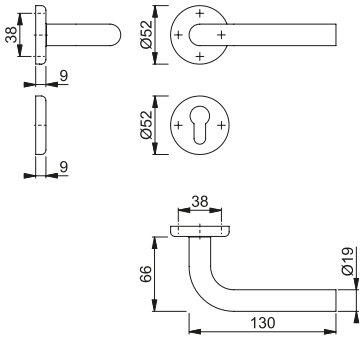





E1555Z/23P/23PS New

HOPPE stainless steel handle set on rose with escutcheons for profile doors:
- Bearing: loose door handles, maintenance-free slide bearing
- Connection: HOPPE profile spindle (receiver – receiver components)
- Base: nylon
- Fixing: concealed, for multi-purpose screws

Article description			Keyhole	F69 Article no.				P.U.	O.C.
Handle set	40-81	8		**3882459**				2	8

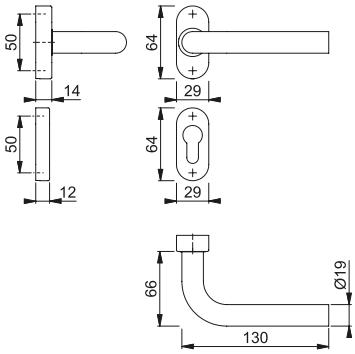





1171/17K/17KS New

HOPPE aluminium handle set on rose with escutcheons for interior doors:
- Bearing: sprung fixed/movable door handles, maintenance-free slide bearing
- Connection: HOPPE profile spindle
- Base: nylon
- Fixing: concealed, multi-purpose screws

Article description			Keyhole	F1 Article no.	F94-1 Article no.	F271* Article no.		P.U.	O.C.
Handle set	35-44	8		3242996	3794070	3794125		20	20
	35-44	8		**3243067**	3798231	3798257		20	20
	40	8 5-8		3243104	3800636	3800644		20	20

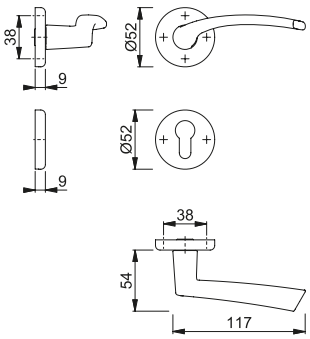

***** Suitable for interior applications only.





1171/88K/88KS New

HOPPE aluminium handle set on rose with escutcheons for interior doors:
- Bearing: sprung fixed/movable door handles, maintenance-free slide bearing
- Connection: HOPPE profile spindle
- Base: nylon
- Fixing: concealed, multi-purpose screws

Article description			Keyhole	F1 Article no.	F4 Article no.	F94-1 Article no.	F271* Article no.	P.U.	O.C.
Handle set	35-44	8		3246305	3798505	3794133	3794141	20	20
				3246330	3798521	3798556	3798564	20	20
	40	8 5-8		3801196	3801217	3801233	3801250	20	20

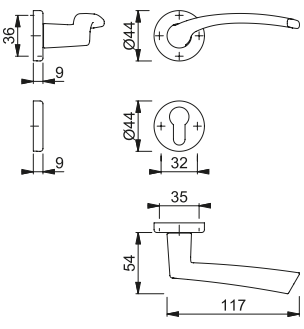

***** Suitable for interior applications only.



1766/3022P New

HOPPE aluminium handle set on backplate for interior doors:
- Bearing: sprung fixed/movable door handles, maintenance-free slide bearing
- Connection: HOPPE profile spindle
- Fixing: visible, multi-purpose screws

Article description			Keyhole/ Distance	F94-1 Article no.	F249 Article no.	F271* Article no.		P.U.	O.C.
Handle set on backplate	37-58	8	70	3800695	3800679	3800652		10	10
			90	3800767	3800724	3800708		10	10
			72	3801401	3803298	3801372		10	10
	47-68	8	85	3800804	3800791	**3800775**		10	10
	40-49	8 5-8	90	3800898	3800880	3800855		10	10

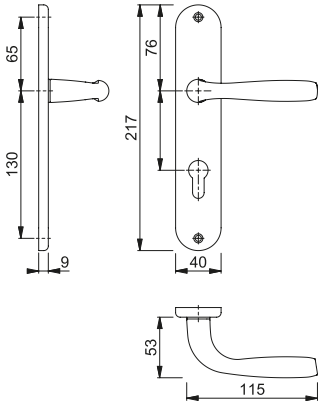

***** Suitable for interior applications only.

Matching products for other applications, available upon request:



0766/U23

Window handle
Finish shown: **F271**



1766/23P/23PS

Handle set on rose
Finish shown: **F271**





1766/17K/17KS New

HOPPE aluminium handle set on rose with escutcheons for interior doors:
- Bearing: sprung fixed/movable door handles, maintenance-free slide bearing
- Connection: HOPPE profile spindle
- Base: nylon
- Fixing: concealed, multi-purpose screws

Article description			Keyhole	F94-1 Article no.	F249 Article no.	F271* Article no.		P.U.	O.C.
Handle set	39-60	8		3800169	3800126	3800089		20	20
	49-70	8		3800177	3800134	**3800097**		20	20
	39-48	8 5-8		3800185	3800142	3800118		20	20

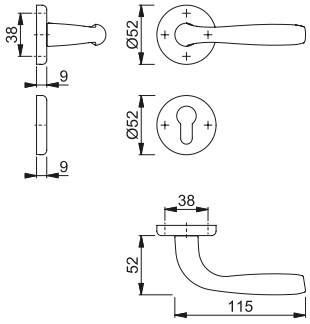

* Suitable for interior applications only.





1766/88K/88KS New

HOPPE aluminium handle set on rose with escutcheons for interior doors:
- Bearing: sprung fixed/movable door handles, maintenance-free slide bearing
- Connection: HOPPE profile spindle
- Base: nylon
- Fixing: concealed, multi-purpose screws

Article description			Keyhole	F94-1 Article no.	F249 Article no.	F271* Article no.		P.U.	O.C.
Handle set	39-60	8		3799161	3799137	3799102		20	20
	49-70	8		3799170	3799153	**3799111**		20	20
	40-49	8 5-8		3799591	3799583	3799575		20	20

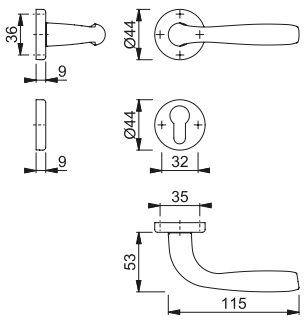

* Suitable for interior applications only.



M1941/332P

HOPPE brass handle set on backplate for interior doors:
- Bearing: sprung fixed/movable door handles, maintenance-free slide bearing
- Connection: HOPPE solid spindle
- Fixing: visible, M4 thread screws with sleeve nuts

Article description			Keyhole/ Distance	F41 Article no.	F71 Article no.			P.U.	O.C.
Handle set on backplate	34-63	8	72	2266451	2248051			10	10
			85	2040250	**2039945**			10	10

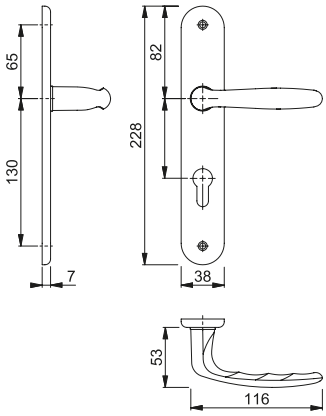

Matching products for other applications, available upon request:



M0941/U23

Window handle
Finish shown: **F71**





M1941/88K/88KS

HOPPE brass handle set on rose with escutcheons for interior doors:
- Bearing: sprung fixed/movable door handles, maintenance-free slide bearing
- Connection: HOPPE solid spindle
- Base: nylon
- Fixing: concealed, multi-purpose screws

Article description			Keyhole	F41 Article no.	F71 Article no.			P.U.	O.C.
Handle set	34-63	8		2040276	2039101			20	20
				2040321	**2039620**			20	20
	36-41	8 5-8		2059065	2059049			20	20

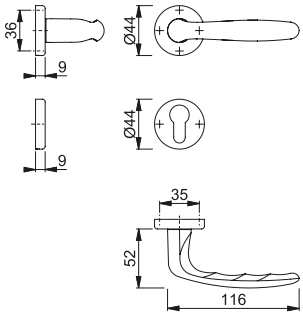



M1740/332P

HOPPE brass handle set on backplate for interior doors:
- Bearing: sprung fixed/movable door handles, maintenance-free slide bearing
- Connection: HOPPE profile spindle
- Fixing: visible, multi-purpose screws

Article description			Keyhole/ Distance	F41 Article no.	F71 Article no.	F73 Article no.		P.U.	O.C.
Handle set backplate	38-47	8	70	2840388	1751084	1998263		10	10
			90	2840370	1751033	1997720		10	10
			72	2325853	2325845			10	10
			85	2840396	**1751105**	1998271		10	10

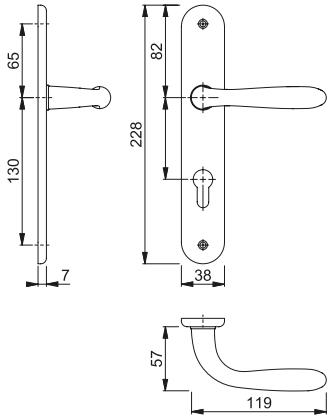

Matching products for other applications, available upon request:



M0740/U23

Window handle
Finish shown: **F71**



M1740/23P/23PS

Handle set on rose
Finish shown: **F71**





M1740/88K/88KS

HOPPE brass handle set on rose with escutcheons for interior doors:
- Bearing: sprung fixed/movable door handles, maintenance-free slide bearing
- Connection: HOPPE profile spindle
- Base: nylon
- Fixing: concealed, multi-purpose screws

Article description			Keyhole	F41	F49	F71	F73	P.U.	O.C.
				Article no.	Article no.	Article no.	Article no.		
Handle set	38-47	8		2840329	2839555	1751201	1885939	20	20
				2840353	2839563	**1751210**	1885963	20	20

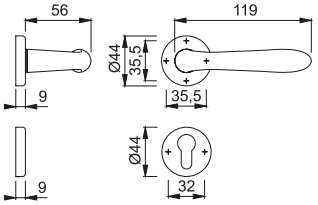





168L/88K/88KS New

HOPPE aluminium handle set on rose with escutcheons for interior doors:
- Bearing: sprung fixed/movable door handles, maintenance-free slide bearing
- Connection: HOPPE profile spindle
- Base: nylon
- Fixing: concealed, multi-purpose screws

Article description			Keyhole	F94-1 Article no.	F249 Article no.	F271* Article no.		P.U.	O.C.
Handle set	39-60	8		3738107	3738078	3738019		20	20
	49-70	8		3738115	3738086	**3738027**		20	20
	40-46	8 5-8		3738123	3738094	3738035		20	20

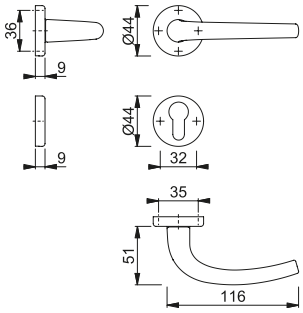

* Suitable for interior applications only.

2

Matching products for other applications, available upon request:



068L/U23

Window handle
Finish shown: **F271**



168L/30P/30PS

Handle set on rose
Finish shown: **F271**



E1444Z/17K/17KS New

HOPPE stainless steel handle set on rose with escutcheons for interior doors:
- Bearing: loose door handles, non-handed spring cassettes, maintenance-free slide bearing
- Connection: HOPPE profile spindle
- Base: nylon, supporting lugs
- Fixing: concealed, multi-purpose screws

Article description			Keyhole	F69 Article no.				P.U.	O.C.
Handle set	35-54	8		3883945				2	20
	55-74	8		**3883953**				2	20
	40-48	8 5-8		3885140				2	20

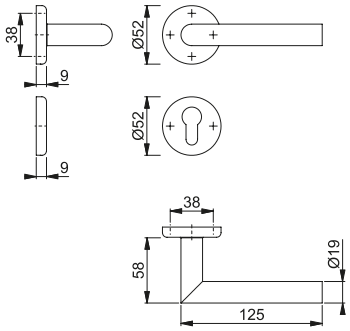



E1444Z/23P/23PS New

HOPPE stainless steel handle set on rose with escutcheons for profile doors:
- Bearing: loose door handles, maintenance-free slide bearing
- Connection: HOPPE profile spindle (receiver – receiver components)
- Base: nylon
- Fixing: concealed, for multi-purpose screws

Article description			Keyhole	F69 Article no.				P.U.	O.C.
Handle set	40-81	8		**3882416**				2	8

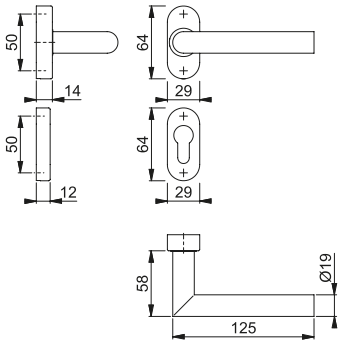



M40H/17K

HOPPE brass knob (pad) on rose for entrance doors:
- Bearing: fixed knob (pad)
- Base: nylon
- Fixing: concealed, for multi-purpose screws

Article description				F71				P.U.	O.C.
				Article no.					
Knob, piece				**3055613**				10	10

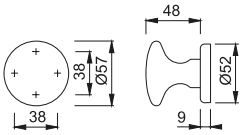



430

HOPPE aluminium pull handle for French doors:
- Fixing: visible, for multi-purpose screws

Article description			Dimension	F1	F2	F4		P.U.	O.C.
				Article no.	Article no.	Article no.			
Pull handle, piece			90 mm	**517077**	517060	517053		50	50

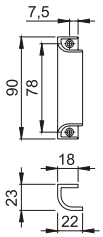

HOPPE®
Handle of excellence.

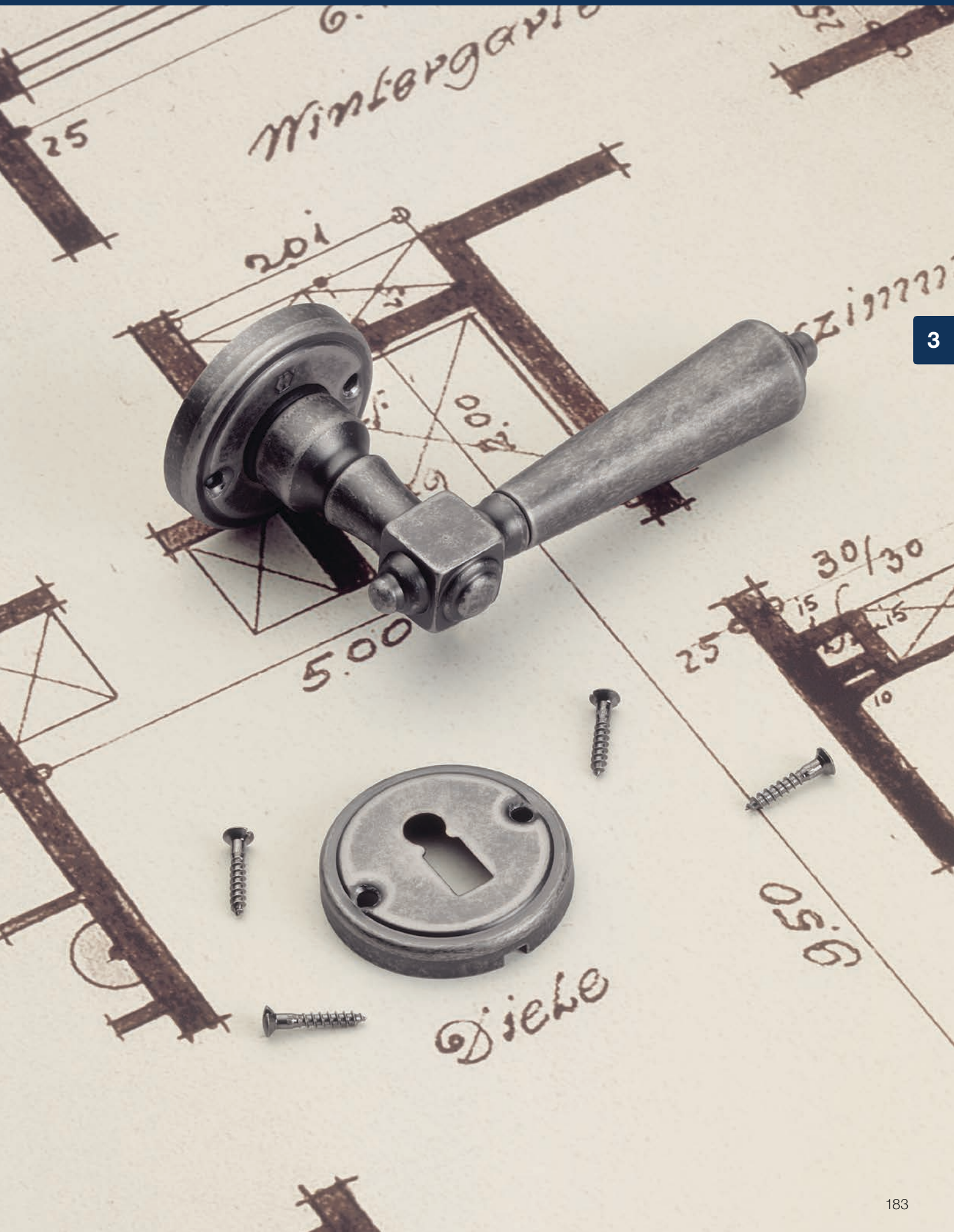

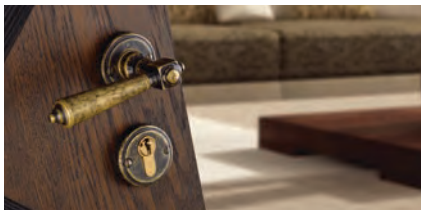

The dura**vert**® product line

for the discerning

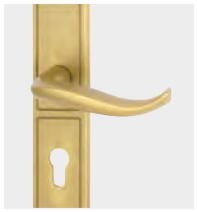

Ravenna
M1788
New
page 188



Singapore
M172
page 192



= Brass



The duraplus® product line

more than usual



Elba
M1613
page 199



Valencia
M170
page 201



Wien
M123
page 203

Interior door handles – Antiqua





for the discerning duravert®

Ravenna



This series combines European flair and Asian culture into an extravagant handle set on backplate.





Quick-Fit

M1788/2788N New

HOPPE brass handle set on backplate for interior doors:
- Bearing: loose door handles, non-handed spring cassettes, maintenance-free slide bearing
- Connection: **HOPPE Quick-Fit connection** with HOPPE solid spindle (spindle – receiver components)
- Backplates: outside with supporting lugs, inside without
- • Fixing: visible inside, bolt-through, M4 thread screws

Article description			Keyhole/ Distance	F54 Article no.	F55 Article no.	F56 Article no.	F73-1 Article no.	P.U.	O.C.
Handle set on backplate	45-50	8	72	3911109	3911117	**3911133**	3911070	1	10

Article description			Keyhole/ Distance	F73M-1 Article no.	F76 Article no.	F77-R Article no.		P.U.	O.C.
Handle set on backplate	45-50	8	72	3911150	3911141	3993159		1	10

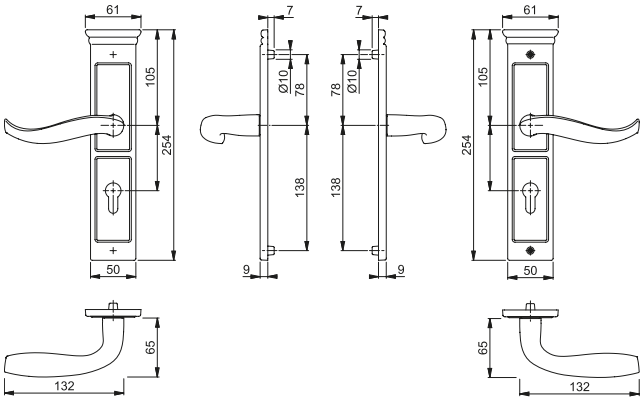

Finishes:



The Resista® guarantee applies to all finishes with the letter **R** in the finish key.

Resista®

Matching products for other applications, available upon request:



Secustik®

M0788/US910

Secustik® window handle
Finish shown: **F56**
Detailed information on the Secustik® technology can be found in our manual: HOPPE – Handle of excellence. Basic information.

Singapore



This series, like the city, is a successful blend of the traditional and modern



Singapore (Brass)



M172/15K-2/15KS-2

HOPPE brass handle set on rose with escutcheons for interior doors:
- Bearing: loose door handles, non-handed spring cassettes, maintenance-free slide bearing
- Connection: HOPPE profile spindle (spindle – receiver components)
- Base: nylon
- Fixing: visible, multi-purpose screws

Article description			Keyhole	F54	F55	F56	F76	P.U.	O.C.
				Article no.	Article no.	Article no.	Article no.		
Handle set	30-66	8		2450961	2450970	2450988	2450996	1	10
				2451956	2451972	**2451981**	2451999	1	10
	36-45	8 5-8		2480466	2480482	2480491	2480511	1	10

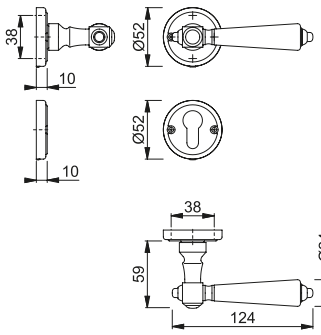

Finishes:

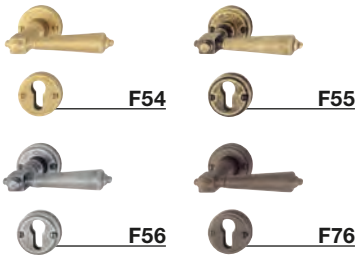

Matching products for other applications, available upon request:



M072/7

Window handle
Finish shown: **F56**

Interior door handles – Antiqua





more than usual duraplus®

HOPPE®
Handle of excellence.





M1613/300LF

HOPPE brass handle set on narrow backplate for French doors:
- Bearing: loose door handles, maintenance-free slide bearing
- Connection: HOPPE profile spindle (receiver – receiver components)
- Fixing: visible, multi-purpose screws

Article description			Keyhole/ Distance	F54 Article no.	F55 Article no.	F56 Article no.	F76 Article no.	P.U.	O.C.
Handle set on backplate	60-81	8	85	2931360	**2931394**	2931407	2931431	1	4

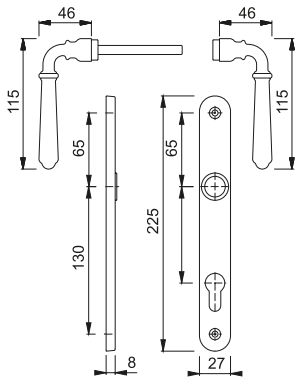





M1613/88K-2/88KS-2

HOPPE brass handle set on rose with escutcheons for interior doors:
- Bearing: loose door handles, non-handed spring cassettes, maintenance-free slide bearing
- Connection: HOPPE profile spindle (spindle – receiver components)
- Base: nylon
- Fixing: visible, multi-purpose screws

Article description			Keyhole	F54 Article no.	F55 Article no.	F56 Article no.	F76 Article no.	P.U.	O.C.
Handle set	32-52	8		2931001	2931010	2931036	2931044	1	10
	62-82	8		2931052	**2931061**	2931079	2931095	1	10
	41-51	8 5-8		2931221	2931247	2931255	2931263	1	10

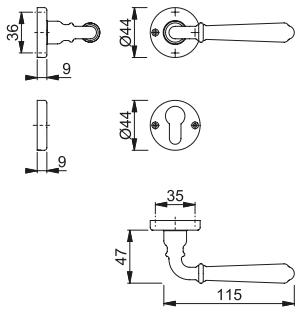







M170/15K-2/15KS-2

HOPPE brass handle set on rose with escutcheons for interior doors:
- Bearing: loose door handles, non-handed spring cassettes, maintenance-free slide bearing
- Connection: HOPPE profile spindle (spindle – receiver components)
- Base: nylon
- Fixing: visible, multi-purpose screws

Article description			Keyhole	F54	F55	F56	F76	P.U.	O.C.
				Article no.	Article no.	Article no.	Article no.		
Handle set	28-68	8		2450929	2450937	2450945	2450953	1	10
				2451905	**2451921**	2451930	2451948	1	10
	38-47	8 5-8		2480415	2480431	2480440	2480458	1	10

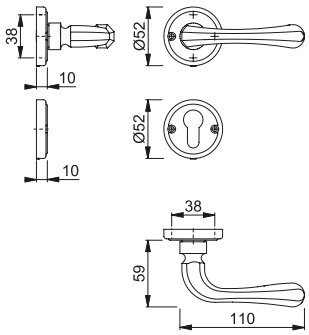







Quick-Fit

M123/15K-2/15KS-2

HOPPE brass handle set on rose with escutcheons for interior doors:
- Tested to **DIN EN 1906**: 37-0140A, handle set for commercial applications
- Bearing: loose door handles, non-handed spring cassettes, maintenance-free slide bearing
- Connection: **HOPPE Quick-Fit connection** with HOPPE solid spindle (spindle – receiver components)
- Base: nylon
- Fixing: visible, multi-purpose screws

Article description			Keyhole	F54 Article no.	F55 Article no.	F56 Article no.	F76 Article no.	P.U.	O.C.
Handle set	30-61	8		2837066	2837074	2837091	2837103	1	10
				2837111	**2837138**	2837146	2837154	1	10
	38-47	8 5-8		2838798	2838801	2838819	2838827	1	10

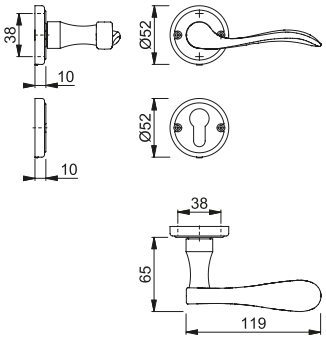

HOPPE®
Handle of excellence.

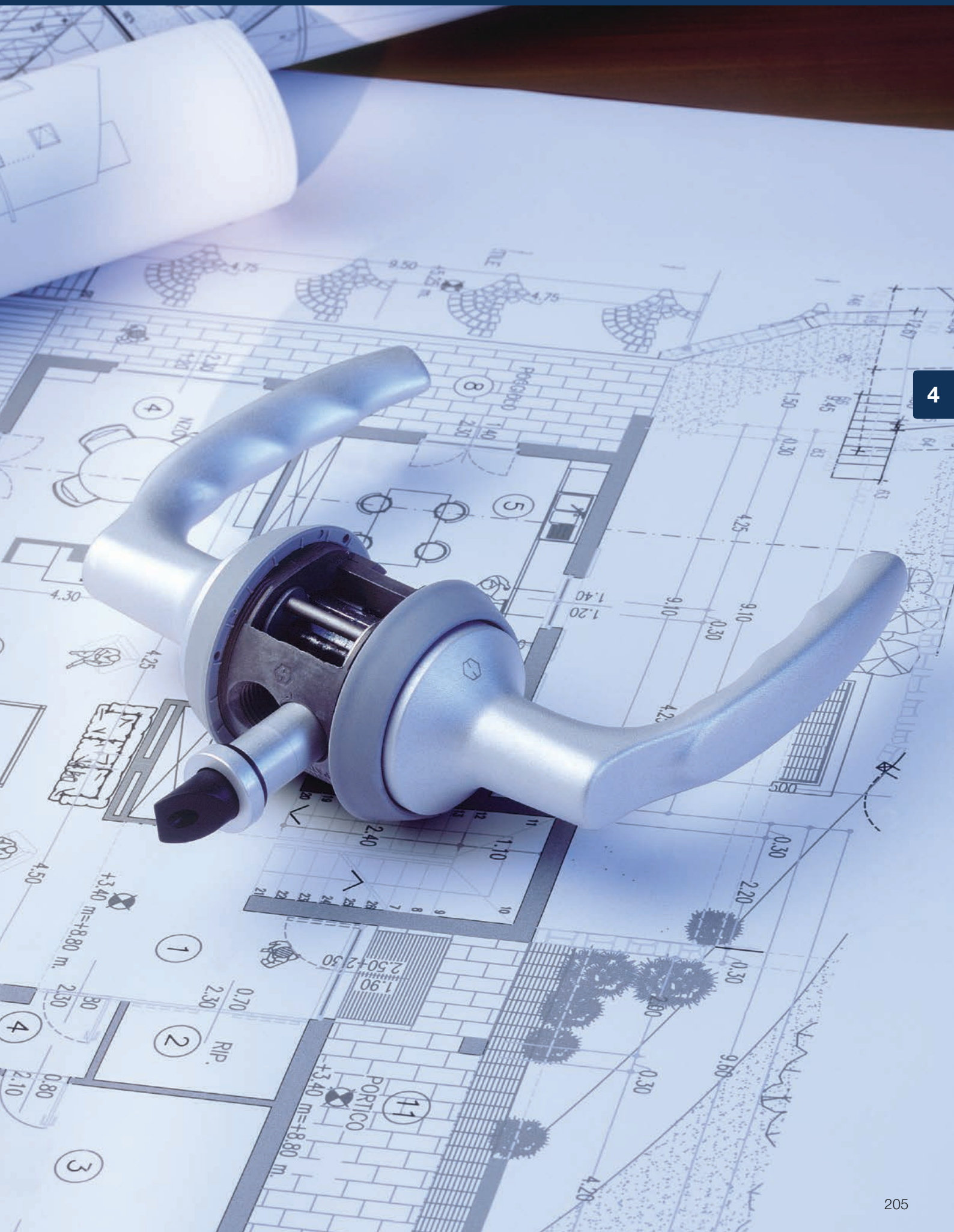



The dura**vert**® product line

for the discerning



Athinai
HCS® M156S
page 210



Capri
HCS® M1950S
page 211



Perth
HCS® A1880
page 212



= Aluminium = Stainless steel = Nylon = Brass



The duraplus® product line

more than usual



Arles
HCS® A197S
page 216



Atlanta
HCS® A1530
page 218



Groningen
HCS® A1885
page 220



London
HCS® A113
page 222

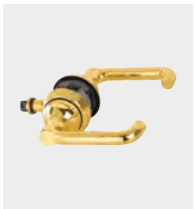

Paris
HCS® A(M/K) 138S
page 224

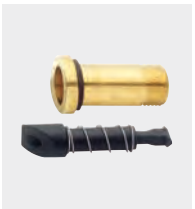

HCS® supplementary range
page 229



HCS® Clip-in components
page 235

HCS® – HOPPE Compact System





for the discerning duravert®



HCS® M156S

HCS® with brass door handles for interior doors:
- Door type: for flush wood doors
- Version: standard
- System core: aluminium pressure die-casting
- Latch tube: brass with thread
- Latchbolt: glass fibre reinforced nylon, low-noise
- Decorative rings: stainless steel with threaded nylon insert
- Strike plate: none
- Fixing: via latch tube and decorative rings
- Special feature: combines door hardware and lock in a single system, door must be prepared accordingly

Article description	Version		F49/F69 Article no.	F77-R/F52-R Article no.			P.U.	O.C.
Door handle, set Passage		Flush 35-43	**2571042**	3054725			1	10
		Rebated 38-43	2570912	3054733			1	10
Slot.head/Turn button	SK/OL-15	Flush 35-43	2571051	3054784			1	10
		Rebated 38-43	2571085	3054792			1	10
Cylinder/Turn button	15/OL-15	Flush 35-43	2571069	3054768			1	10
		Rebated 38-43	2571093	3054776			1	10
Cylinder/Cylinder	15/15	Flush 35-43	2571077	3054741			1	10
		Rebated 38-43	2571114	3054750			1	10

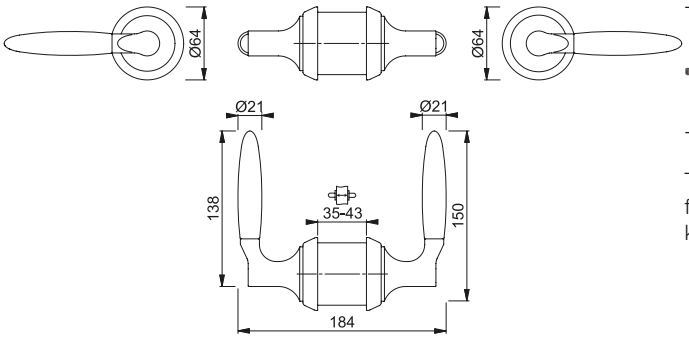

Two-tone finishes:



F49/F69



F77-R/F52-R

The Resista® guarantee applies to all finishes with the letter **R** in the finish key.

Resista®

Combination decorative rings:

Handle:	Decorative ring:
F49/F69	F69
F77-R/F52-R	F77-R

Detailed information on HCS® can be found in our manual: HOPPE – Handle of excellence. Basic information.

Further solutions:
Interior door handle.....22
Pull handles 262



HCS® M1950S

HCS® with brass door handles for interior doors:
- Door type: for flush wood doors
- Version: standard
- System core: aluminium pressure die-casting
- Latch tube: brass with thread
- Latchbolt: glass fibre reinforced nylon, low-noise
- Decorative rings: stainless steel with threaded nylon insert
- Strike plate: none
- Fixing: via latch tube and decorative rings
- Special feature: combines door hardware and lock in a single system, door must be prepared accordingly

Article description	Version	F49/F69 Article no.				P.U.	O.C.
Door handle, set Passage		Flush 35-43	**2492416**			1	10
		Rebated 38-43	2492483			1	10
Slot.head/Turn button	SK/OL-15	Flush 35-43	2492491			1	10
		Rebated 38-43	2492512			1	10
Cylinder/Turn button	15/OL-15	Flush 35-43	2492521			1	10
		Rebated 38-43	2492547			1	10
Cylinder/Cylinder	15/15	Flush 35-43	2492555			1	10
		Rebated 38-43	2492571			1	10

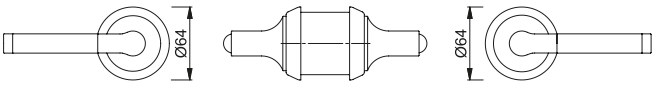

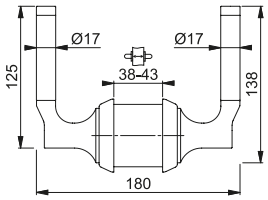

The Resista® guarantee applies to all finishes with the letter **R** in the finish key.

Resista®

Combination decorative rings:

Handle:	Decorative ring:
F49/F69	F69

Detailed information on HCS® can be found in our manual: HOPPE – Handle of excellence. Basic information.

Further solution:
Interior door handles.....38



HCS® A1880

HCS® with aluminium door handles for interior doors:
- Door type: for flush wood doors
- Version: standard
- System core: aluminium pressure die-casting
- Latch tube: aluminium with thread
- Latchbolt: glass fibre reinforced nylon, low-noise
- Decorative rings: aluminium with thread
- Strike plate: none
- Fixing: via latch tube and decorative rings
- Special feature: combines door hardware and lock in a single system, door must be prepared accordingly

Article description	Version		F1-2/F9-2 Article no.				P.U.	O.C.
Door handle, set Passage		Flush 35-43	**2537119**				1	10
		Rebated 38-43	2537151				1	10
Emergency release/turn with red-green-indicator	RGSK/OL-15SEN	Flush 35-43	2537282				1	10
		Rebated 38-43	2537291				1	10
Slot.head/Turn button	SK/OL-15	Flush 35-43	2537160				1	10
		Rebated 38-43	2537194				1	10
Cylinder/Turn button	15/OL-15	Flush 35-43	2537207				1	10
		Rebated 38-43	2537240				1	10
Cylinder/Cylinder	15/15	Flush 35-43	2537258				1	10
		Rebated 38-43	2537274				1	10

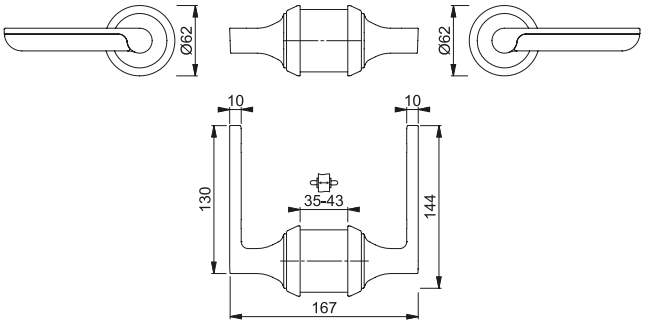

Combination decorative rings:

Handle:	Decorative ring:
F1-2/F9-2	F1-2

Detailed information on HCS® can be found in our manual: HOPPE – Handle of excellence. Basic information.



HCS® GD A1880

HCS® with aluminium door handles and emergency release/turn for interior doors:
- Door type: for glass and partition doors (door thicknesses 8-10 mm)
- Version: non-keyed locking
- Adapter: aluminium with nylon base
- System core: aluminium pressure die-casting
- Latch tube: aluminium with thread
- Latchbolt: glass fibre reinforced nylon, low-noise
- Fixing: via adapter, latch tube and decorative rings
- Special feature: combines door hardware and lock in a single system, door must be prepared accordingly

Article description	Version		F1-2/ F9-2 Article no.				P.U.	O.C.
Slot.head/Turn button	SK/OL-15	8	**2537338**				1	10
		10	2537362				1	10
Cylinder/Turn button	15/OL-15	8	2537389				1	10
		10	2537397				1	10
Cylinder/Cylinder	15/15	8	2537400				1	10
		10	2537418				1	10

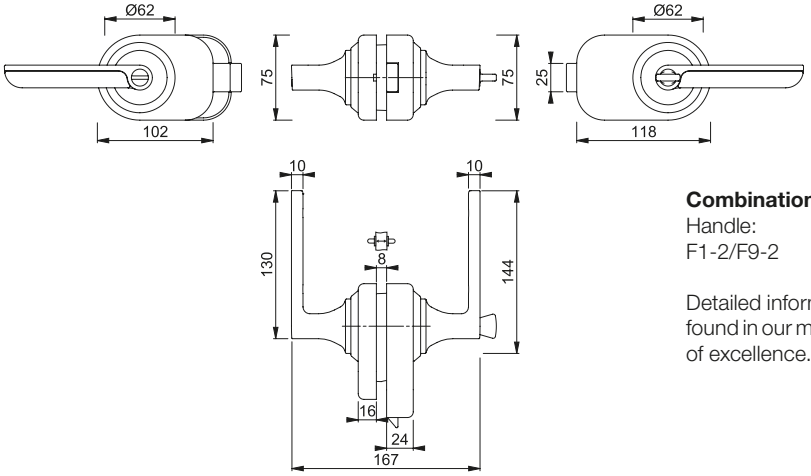

Combination decorative rings:

Handle:	Decorative ring:
F1-2/F9-2	F7037M

Detailed information on HCS® can be found in our manual: HOPPE – Handle of excellence. Basic information.

HCS® – HOPPE Compact System





more than usual duraplus®



HCS® A197S

HCS® with aluminium door handles for interior doors:

- Door type: for flush wood doors
- Version: standard
- System core: aluminium pressure die-casting
- Latch tube: aluminium with thread
- Latchbolt: glass fibre reinforced nylon, low-noise
- Decorative rings: nylon with thread
- Strike plate: none
- Fixing: via latch tube and decorative rings
- Special feature: combines door hardware and lock in a single system, door must be prepared accordingly

Article description	Version		F1-2 Article no.	F9-2 Article no.			P.U.	O.C.
Door handle, set Passage		Flush 35-43	2572248	**2572264**			1	10
		Rebated 38-43	2572256	2572281			1	10
Emergency release/turn with red-green-indicator	RGSK/OL-15SEN	Flush 35-43	2572521	2572547			1	10
		Rebated 38-43	2572539	2572555			1	10
Slot.head/Turn button	SK/OL-15	Flush 35-43	2572336	2572395			1	10
		Rebated 38-43	2572361	2572424			1	10
Cylinder/Turn button	15/OL-15	Flush 35-43	2572344	2572408			1	10
		Rebated 38-43	2572379	2572432			1	10
Cylinder/Cylinder	15/15	Flush 35-43	2572352	2572416			1	10
		Rebated 38-43	2572387	2572459			1	10

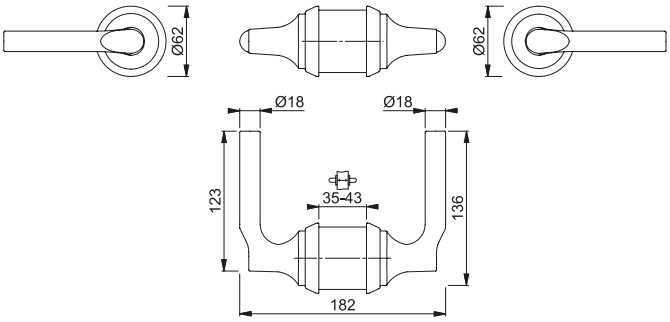

Combination decorative rings:

Handle:	Decorative ring:
F1-2	F7037M
F9-2	F7022M

Detailed information on HCS® can be found in our manual: HOPPE – Handle of excellence. Basic information.



HCS® GD A197S

HCS® with aluminium door handles for interior doors:
- Door type: for glass and partition doors (door thicknesses 8-10 mm)
- Version: standard
- Adapter: aluminium with nylon base
- System core: aluminium pressure die-casting
- Latch tube: aluminium with thread
- Latchbolt: glass fibre reinforced nylon, low-noise
- Fixing: via adapter, latch tube and decorative rings
- Special feature: combines door hardware and lock in a single system, door must be prepared accordingly

Article description	Version		F1-2 Article no.				P.U.	O.C.
Door handle, set Passage		8	**2694211**				1	10
Slot.head/Turn button	SK/OL-15	8	2574041				1	10
		10	2574059				1	10
Cylinder/Turn button	15/OL-15	8	2574067				1	10
		10	2574075				1	10
Cylinder/Cylinder	15/15	8	2574083				1	10
		10	2574091				1	10

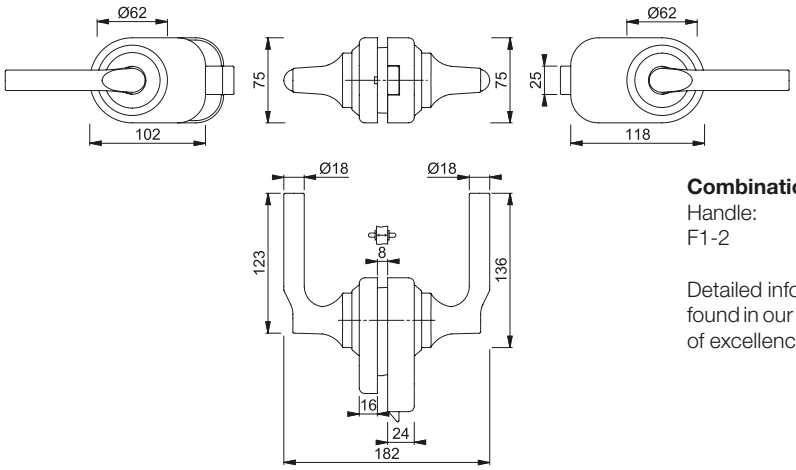

Combination decorative rings:

Handle:	Decorative ring:
F1-2	F7037M

Detailed information on HCS® can be found in our manual: HOPPE – Handle of excellence. Basic information.



HCS® A1530

HCS® with aluminium door handles for interior doors:
- Door type: for flush wood doors
- Version: standard
- System core: aluminium pressure die-casting
- Latch tube: aluminium with thread
- Latchbolt: glass fibre reinforced nylon, low-noise
- Decorative rings: nylon with thread
- Strike plate: none
- Fixing: via latch tube and decorative rings
- Special feature: combines door hardware and lock in a single system, door must be prepared accordingly

Article description	Version		F1-2 Article no.	F2-2 Article no.	F9-2 Article no.		P.U.	O.C.
Door handle, set Passage		Flush 35-43	2475907	2573005	**2573013**		1	10
		Rebated 38-43	2475940	2573021	2573030		1	10
Emergency release/turn with red-green-indicator	RGSK/OL-15SEN	Flush 35-43	2475991	2573460	2573486		1	10
		Rebated 38-43	2476061	2573478	2573494		1	10
Slot.head/Turn button	SK/OL-15	Flush 35-43	2573179	2573195	2573216		1	10
		Rebated 38-43	2573187	2573208	2573224		1	10
Cylinder/Turn button	15/OL-15	Flush 35-43	2573232	2573259	2573275		1	10
		Rebated 38-43	2573241	2573267	2573283		1	10
Cylinder/Cylinder	15/15	Flush 35-43	2475958	2573291	2573312		1	10
		Rebated 38-43	2475974	2573304	2573321		1	10

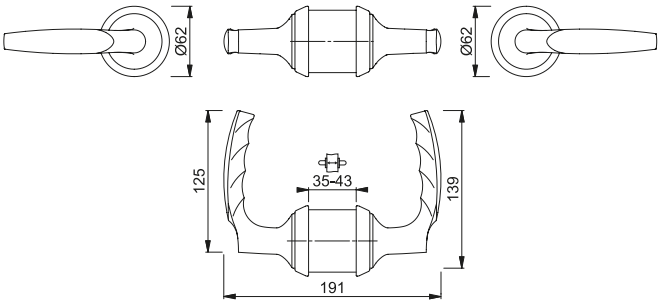

Combination decorative rings:

Handle:	Decorative ring:
F1-2	F7037M
F2-2	F7032M
F9-2	F7022M

Detailed information on HCS® can be found in our manual: HOPPE – Handle of excellence. Basic information.

Further solution:
Interior door handle.....70



HCS® GD A1530

HCS® with aluminium door handles for interior doors:
- Door type: for glass and partition doors (door thicknesses 8-10 mm)
- Version: standard
- Adapter: aluminium with nylon base
- System core: aluminium pressure die-casting
- Latch tube: aluminium with thread
- Latchbolt: glass fibre reinforced nylon, low-noise
- Fixing: via adapter, latch tube and decorative rings
- Special feature: combines door hardware and lock in a single system, door must be prepared accordingly

Article description	Version	F1-2 Article no.				P.U.	O.C.
Door handle, set Passage		8	**2694202**			1	10
Slot.head/Turn button	SK/OL-15	8	2574201			1	10
		10	2574219			1	10
Cylinder/Turn button	15/OL-15	8	2574243			1	10
		10	2574260			1	10
Cylinder/Cylinder	15/15	8	2574278			1	10
		10	2574294			1	10

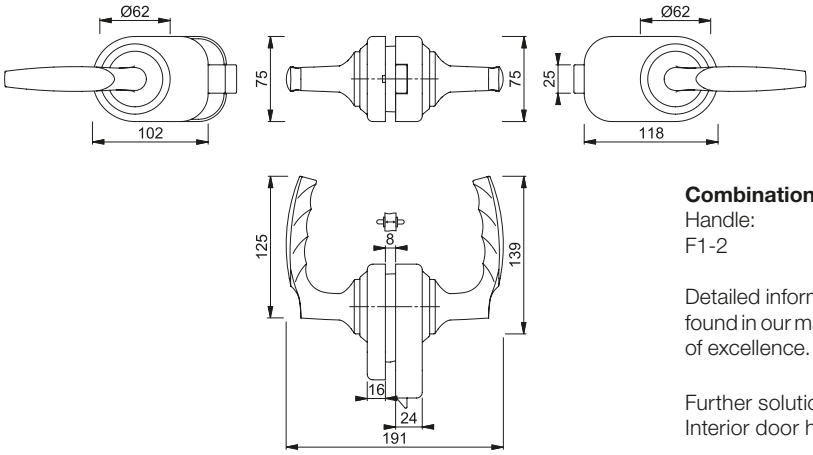

Combination decorative rings:

Handle:	Decorative ring:
F1-2	F7037M

Detailed information on HCS® can be found in our manual: HOPPE – Handle of excellence. Basic information.

Further solution:
Interior door handle.....70



HCS® A1885

HCS® with aluminium door handles for interior doors:
- Door type: for flush wood doors
- Version: standard
- System core: aluminium pressure die-casting
- Latch tube: aluminium with thread
- Latchbolt: glass fibre reinforced nylon, low-noise
- Decorative rings: aluminium with thread
- Strike plate: none
- Fixing: via latch tube and decorative rings
- Special feature: combines door hardware and lock in a single system, door must be prepared accordingly

Article description	Version		F1-2 Article no.	F9-2 Article no.			P.U.	O.C.
Door handle, set Passage		Flush 35-43	**2546947**	2546980			1	10
		Rebated 38-43	2546971	2547000			1	10
Emergency release/turn with red-green-indicator	RGSK/OL-15SEN	Flush 35-43	2547202	2547229			1	10
		Rebated 38-43	2547211	2547237			1	10
Slot.head/Turn button	SK/OL-15	Flush 35-43	2547018	2547051			1	10
		Rebated 38-43	2547042	2547077			1	10
Cylinder/Turn button	15/OL-15	Flush 35-43	2547085	2547114			1	10
		Rebated 38-43	2547106	2547131			1	10
Cylinder/Cylinder	15/15	Flush 35-43	2547149	2547173			1	10
		Rebated 38-43	2547165	2547190			1	10

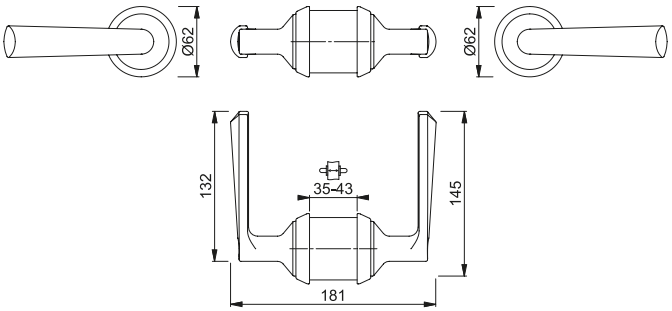

Combination decorative rings:

Handle:	Decorative ring:
F1-2	F1-2
F9-2	F9-2

Detailed information on HCS® can be found in our manual: HOPPE – Handle of excellence. Basic information.



HCS® GD A1885

HCS® with aluminium door handles for interior doors:
- Door type: for glass and partition doors (door thicknesses 8-10 mm)
- Version: standard
- Adapter: aluminium with nylon base
- System core: aluminium pressure die-casting
- Latch tube: aluminium with thread
- Latchbolt: glass fibre reinforced nylon, low-noise
- Fixing: via adapter, latch tube and decorative rings
- Special feature: combines door hardware and lock in a single system, door must be prepared accordingly

Article description	Version		F1-2 Article no.				P.U.	O.C.
Door handle, set Passage		8	**2694229**				1	10
Slot.head/Turn button	SK/OL-15	8	2547245				1	10
		10	2547261				1	10
Cylinder/Turn button	15/OL-15	8	2547270				1	10
		10	2547288				1	10
Cylinder/Cylinder	15/15	8	2547296				1	10
		10	2547309				1	10

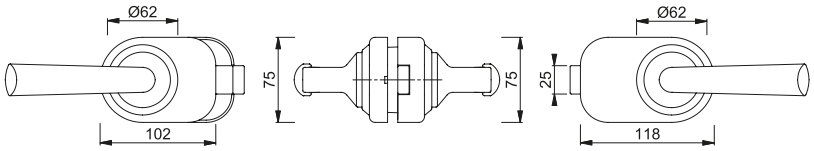

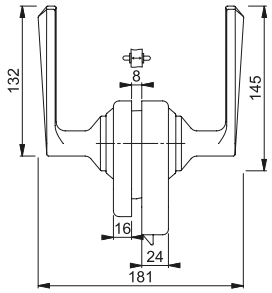

Combination decorative rings:

Handle:	Decorative ring:
F1-2	F7037M

Detailed information on HCS® can be found in our manual: HOPPE – Handle of excellence. Basic information.



HCS® A113

HCS® with aluminium door handles for interior doors:
- Door type: for flush wood doors
- Version: standard
- System core: aluminium pressure die-casting
- Latch tube: aluminium with thread
- Latchbolt: glass fibre reinforced nylon, low-noise
- Decorative rings: nylon with thread
- Strike plate: none
- Fixing: via latch tube and decorative rings
- Special feature: combines door hardware and lock in a single system, door must be prepared accordingly

Article description	Version		F1-2 Article no.	F2-2 Article no.	F9-2 Article no.		P.U.	O.C.
Door handle, set Passage		Flush 35-43	2572563	2572571	**2572580**		1	10
		Rebated 38-43	2572598	2572601	2572619		1	10
Emergency release/turn with red-green-indicator	RGSK/OL-15SEN	Flush 35-43	2572934	2572951	2572977		1	10
		Rebated 38-43	2572942	2572969	2572985		1	10
Slot.head/Turn button	SK/OL-15	Flush 35-43	2572660	2572686	2572707		1	10
		Rebated 38-43	2572678	2572694	2572715		1	10
Cylinder/Turn button	15/OL-15	Flush 35-43	2572723	2572740	2572766		1	10
		Rebated 38-43	2572731	2572758	2572774		1	10
Cylinder/Cylinder	15/15	Flush 35-43	2572782	2572803	2572820		1	10
		Rebated 38-43	2572791	2572811	2572838		1	10

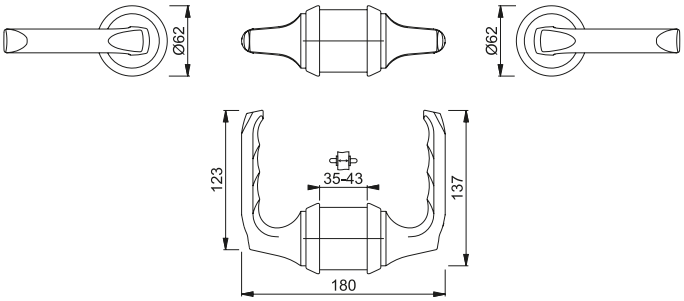

Combination decorative rings:

Handle:	Decorative ring:
F1-2	F7037M
F2-2	F7032M
F9-2	F7022M

Detailed information on HCS® can be found in our manual: HOPPE – Handle of excellence. Basic information.



HCS® GD A113

HCS® with aluminium door handles for interior doors:
- Door type: for glass and partition doors (door thicknesses 8-10 mm)
- Version: standard
- Adapter: aluminium with nylon base
- System core: aluminium pressure die-casting
- Latch tube: aluminium with thread
- Latchbolt: glass fibre reinforced nylon, low-noise
- Fixing: via adapter, latch tube and decorative rings
- Special feature: combines door hardware and lock in a single system, door must be prepared accordingly

Article description	Version		F1-2 Article no.				P.U.	O.C.
Door handle, set Passage		8	**2694245**				1	10
Slot.head/Turn button	SK/OL-15	8	2574104				1	10
		10	2574112				1	10
Cylinder/Turn button	15/OL-15	8	2574121				1	10
		10	2574139				1	10
Cylinder/Cylinder	15/15	8	2574147				1	10
		10	2574155				1	10

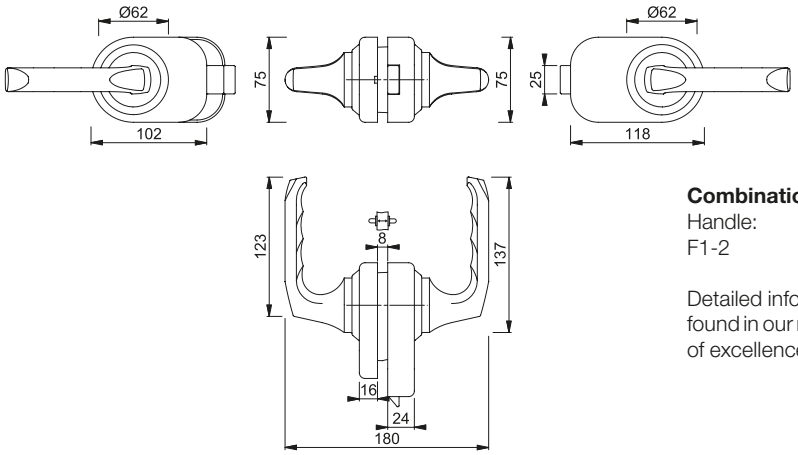

Combination decorative rings:

Handle:	Decorative ring:
F1-2	F7037M

Detailed information on HCS® can be found in our manual: HOPPE – Handle of excellence. Basic information.



HCS® A138S

HCS® with aluminium door handles for interior doors:
- Door type: for flush wood doors
- Version: standard
- System core: aluminium pressure die-casting
- Latch tube: aluminium with thread
- Latchbolt: glass fibre reinforced nylon, low-noise
- Decorative rings: nylon with thread
- Strike plate: none
- Fixing: via latch tube and decorative rings
- Special feature: combines door hardware and lock in a single system, door must be prepared accordingly

Article description	Version		F1-2 Article no.	F9-2 Article no.			P.U.	O.C.
Door handle, set Passage		Flush 35-43	**2571940**	2571966			1	10
		Rebated 38-43	2571958	2571974			1	10
Emergency release/turn with red-green-indicator	RGSK/OL-15SEN	Flush 35-43	2572192	2572213			1	10
		Rebated 38-43	2572205	2572221			1	10
Slot.head/Turn button	SK/OL-15	Flush 35-43	2572002	2572061			1	10
		Rebated 38-43	2572037	2572096			1	10
Cylinder/Turn button	15/OL-15	Flush 35-43	2572011	2572070			1	10
		Rebated 38-43	2572045	2572109			1	10
Cylinder/Cylinder	15/15	Flush 35-43	2572029	2572088			1	10
		Rebated 38-43	2572053	2572117			1	10

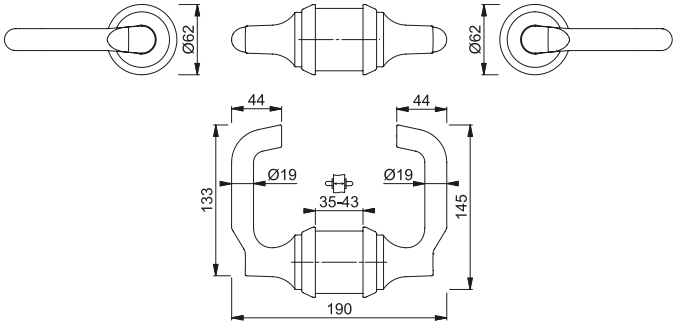

Combination decorative rings:

Handle:	Decorative ring:
F1-2	F7037M
F9-2	F7022M

Detailed information on HCS® can be found in our manual: HOPPE – Handle of excellence. Basic information.

Further solution:
Interior door handles 120



HCS® GD A138S

HCS® with aluminium door handles for interior doors:
- Door type: for glass and partition doors (door thicknesses 8-10 mm)
- Version: standard
- Adapter: aluminium with nylon base
- System core: aluminium pressure die-casting
- Latch tube: aluminium with thread
- Latchbolt: glass fibre reinforced nylon, low-noise
- Fixing: via adapter, latch tube and decorative rings
- Special feature: combines door hardware and lock in a single system, door must be prepared accordingly

Article description	Version		F1-2 Article no.				P.U.	O.C.
Door handle, set Passage		8	**2694253**				1	10
Slot.head/Turn button	SK/OL-15	8	2573970				1	10
		10	2573988				1	10
Cylinder/Turn button	15/OL-15	8	2573996				1	10
		10	2574008				1	10
Cylinder/Cylinder	15/15	8	2574024				1	10
		10	2574032				1	10

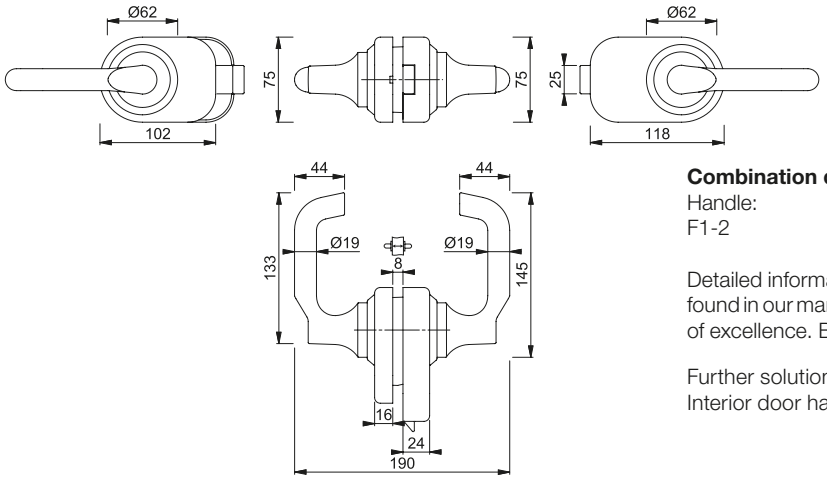

Combination decorative rings:

Handle:	Decorative ring:
F1-2	F7037M

Detailed information on HCS® can be found in our manual: HOPPE – Handle of excellence. Basic information.

Further solution:
Interior door handles 120



HCS® M138S

HCS® with brass door handles for interior doors:

- Door type: for flush wood doors
- Version: standard
- System core: aluminium pressure die-casting
- Latch tube: brass with thread
- Latchbolt: glass fibre reinforced nylon, low-noise
- Decorative rings: brass with threaded nylon insert
- Strike plate: none
- Fixing: via latch tube and decorative rings
- Special feature: combines door hardware and lock in a single system, door must be prepared accordingly

Article description	Version		F41-R Article no.	F71 Article no.			P.U.	O.C.
Door handle, set Passage		Flush 35-43	2571368	**2571341**			1	10
		Rebated 38-43	3070979	798452			1	10
Slot.head/Turn button	SK/OL-15	Flush 35-43	2571448	798483			1	10
		Rebated 38-43	2571472	782277			1	10
Cylinder/Turn button	15/OL-15	Flush 35-43	2571456	2571392			1	10
		Rebated 38-43	2571499	2571430			1	10
Cylinder/Cylinder	15/15	Flush 35-43	2571464	785506			1	10
		Rebated 38-43	2571501	788576			1	10

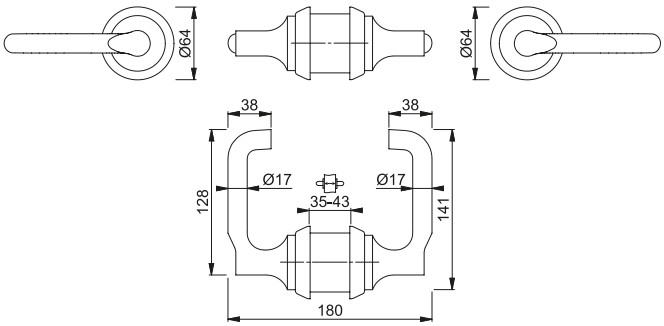

The Resista® guarantee applies to all finishes with the letter **R** in the finish key.

Resista®

Combination decorative rings:

Handle:	Decorative ring:
F41-R	F41-R
F71	F71

Detailed information on HCS® can be found in our manual: HOPPE – Handle of excellence. Basic information.



HCS® K138S

HCS® with nylon door handles for interior doors:

- Door type: for flush wood doors
- Version: standard
- System core: aluminium pressure die-casting
- Latch tube: aluminium with thread
- Latchbolt: glass fibre reinforced nylon, low-noise
- Decorative rings: nylon with thread
- Strike plate: none
- Fixing: via latch tube and decorative rings
- Special feature: combines door hardware and lock in a single system, door must be prepared accordingly

Article description	Version		F7016M Article no.	F9005M Article no.	F9010M Article no.		P.U.	O.C.
Door handle, set Passage		Flush 35-43	2573523	2573507	**2573515**		1	10
		Rebated 38-43	2573566	2573540	2573558		1	10
Slot.head/Turn button	SK/OL-15	Flush 35-43	2573734	2573611	2573671		1	10
		Rebated 38-43	2573769	2573646	2573700		1	10
Cylinder/Turn button	15/OL-15	Flush 35-43	2573742	2573620	2573689		1	10
		Rebated 38-43	2573777	2573654	2573718		1	10
Cylinder/Cylinder	15/15	Flush 35-43	2573751	2573638	2573697		1	10
		Rebated 38-43	2573785	2573662	2573726		1	10

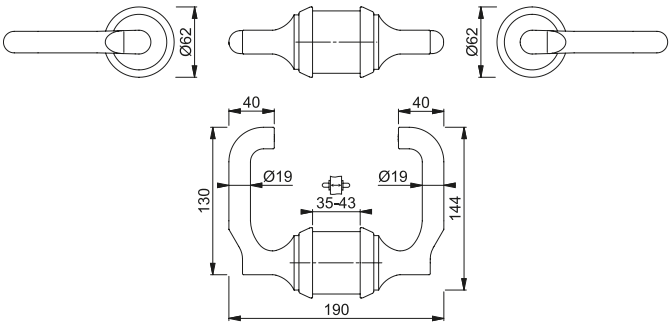

Combination decorative rings:

Handle:	Decorative ring:
F1-2	F7037M

Detailed information on HCS® can be found in our manual: HOPPE – Handle of excellence. Basic information.



HCS® GD K138S

HCS® with nylon door handles for interior doors:
- Door type: for glass and partition doors (door thicknesses 8-10 mm)
- Version: standard
- Adapter: nylon
- System core: aluminium pressure die-casting
- Latch tube: aluminium with thread
- Latchbolt: glass fibre reinforced nylon, low-noise
- Fixing: via adapter, latch tube and decorative rings
- Special feature: combines door hardware and lock in a single system, door must be prepared accordingly

Article description	Version		F7016M Article no.	F9005M Article no.	F9010M Article no.		P.U.	O.C.
Door handle, set Passage		8	on request	**782116**	on request		1	10
Slot.head/Turn button	SK/OL-15	8	on request	2574358	2574391		1	10
		10	on request	2574374	on request		1	10
Cylinder/Turn button	15/OL-15	8	on request	786916	on request		1	10
		10	782802	783748	2574411		1	10
Cylinder/Cylinder	15/15	8	2574471	781690	2574438		1	10
		10	781829	781270	on request		1	10

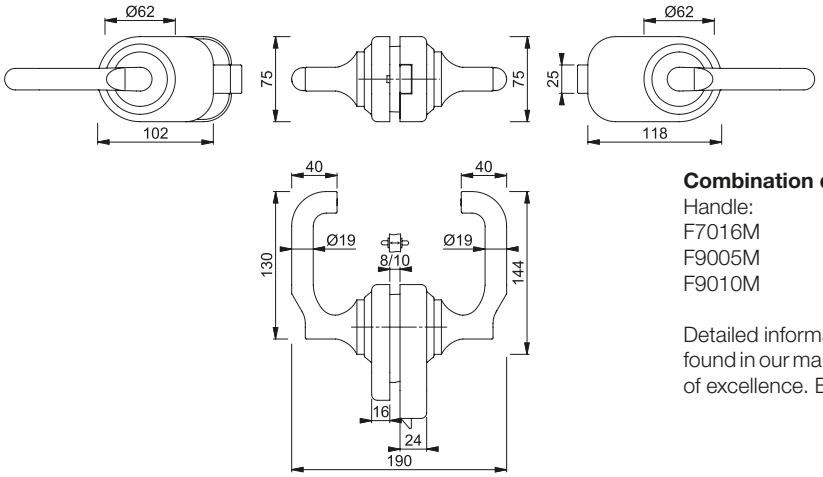

Combination decorative rings:

Handle:	Decorative ring:
F7016M	F7016M
F9005M	F9005M
F9010M	F9010M

Detailed information on HCS® can be found in our manual: HOPPE – Handle of excellence. Basic information.



HCS® GD A761/762

HCS® aluminium latch part:
- Door type: for glass or partition doors (inactive door leaves, door thicknesses 8-10 mm)

Article description				F1-2	F7016ST	F9005ST	F9010ST	P.U.	O.C.
				Article no.	Article no.	Article no.	Article no.		
HCS® latch part for glass doors	8			**2574534**	on request	786855	790487	1	10
	10			2574542	on request	787203	on request	1	10

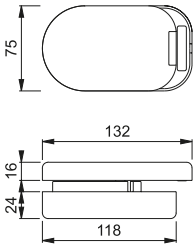



HCS® GD A760/761

HCS® aluminium adapter with latch set:
- Door type: for glass and partition doors (side-hung, door thicknesses 8-10 mm)
- Note: only suitable for rebated door **HCS®**

Article description				F1-2	F9005ST			P.U.	O.C.
				Article no.	Article no.				
HCS® adapter for glass doors	8			2725726	1917347			5	20

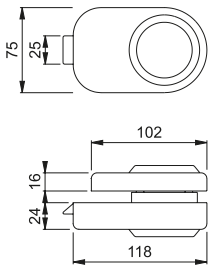



HCS® GD A763

HCS® aluminium adapter:
- Door type: for glass doors with aluminium frames (side-hung, glass thickness 6-8 mm, frame thickness 26 mm)
- Note: only suitable for rebated door **HCS®**

Article description	DTH			F1-2 Article no.				P.U.	O.C.
HCS® adapter for glass doors	6-8 mm			**2212816**					20

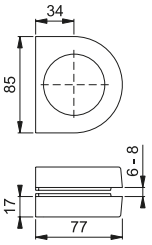

Installation example

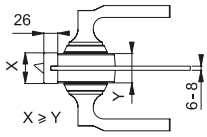



HCS® GD A764

HCS® aluminium adapter:
- Door type: for glass doors with aluminium frames (side-hung, glass thickness 6-8 mm, frame thickness 20 mm)
- Note: only suitable for rebated door **HCS®**

Article description	DTH			F1-2 Article no.				P.U.	O.C.
HCS® adapter for glass doors	6-8 mm			**2212824**					20

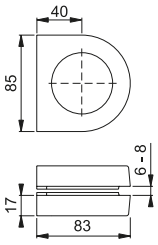

Installation example

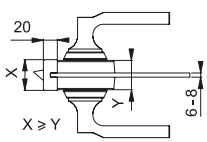



HCS® decorative rings

HCS® aluminium decorative rings with thread:
- Door type: for flush doors (door thicknesses 35-43 mm) and rebated doors (door thicknesses 38-43 mm)
- Fixing: to be screwed on

Article description			Ø	F1-2 Article no.	F9-2 Article no.			P.U.	O.C.
Decorative rings, aluminium, pair	35-43		62 mm	**2453046**	2575027			10	60
	25-35		62 mm	2575051	2575078			10	60
	35-43		75 mm	2575094	2575115			10	60
	43-53		75 mm	2575123	2575140			10	60

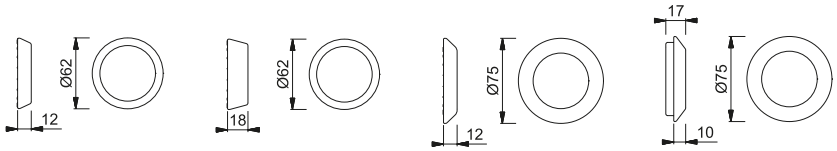



HCS® decorative rings

HCS® stainless steel decorative rings with threaded nylon insert:
- Door type: for flush doors (door thicknesses 35-43 mm) and rebated doors (door thicknesses 38-43 mm)
- Fixing: to be screwed on

Article description			Ø	F68 Article no.	F69 Article no.			P.U.	O.C.
Decorative rings, stainless steel, pair	35-43		64 mm	783656	**785711**			10	60
	35-43		77 mm	828074	783458			10	60

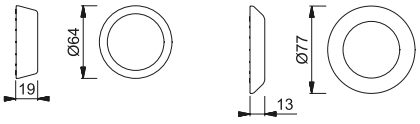



HCS® decorative rings

HCS® brass decorative rings with threaded nylon insert:
- Door type: for flush doors (door thicknesses 35-43 mm) and rebated doors (door thicknesses 38-43 mm)
- Fixing: to be screwed on

Article description			Ø	F71 Article no.	F41 Article no.			P.U.	O.C.
Decorative rings, brass, pair	35-43		64 mm	**650842**	658688			10	60
	35-43		77 mm	658145	658701			10	60
	25-35		64 mm	658671	658695			10	60
	43-53		77 mm	1720886	2195606			10	60

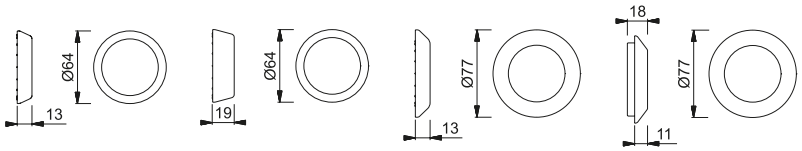



HCS® decorative rings

HCS® nylon decorative rings with thread:
- Door type: for flush doors (door thicknesses 35-43 mm) and rebated doors (door thicknesses 38-43 mm)
- Fixing: to be screwed on

Article description			Ø	F7016M Article no.	F9005M Article no.	F9010M Article no.	F7022M Article no.	P.U.	O.C.
Decorative rings, nylon, pair	25-35		62 mm	658060	658091	658121	2575254	10	60
	35-43		62 mm	658053	658084	658114	**2575351**	10	60
	35-43		75 mm	658077	658107	658138	2575385	10	60
	43-53		75 mm	1707462	1694104	2575422	2575457	10	60

Article description			Ø	F7032M Article no.	F7037M Article no.			P.U.	O.C.
Decorative rings, nylon, pair	25-35		62 mm	2575318	2575334			10	60
	35-43		62 mm	2575369	2575377			10	60
	35-43		75 mm	2575393	2575406			10	60
	43-53		75 mm	2575473	2575502			10	60

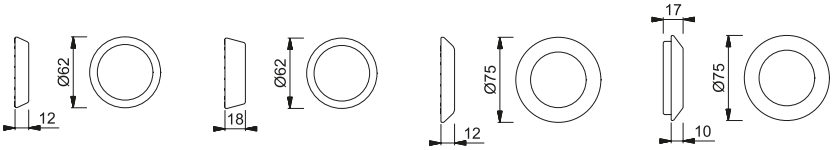



HCS® latch sets

HCS® aluminium latch set:
- Door type: for flush doors and rebated doors (rebate width 24 mm)
- Latch tube: aluminium with thread
- Latchbolt: glass fibre reinforced nylon, low-noise

Article description	Backset			F1 Article no.	F4 Article no.			P.U.	O.C.
HCS® latch set, aluminium	50			1750719	658282			10	60
	60			**2478614**	658299			10	60
	70			2285396	658305			10	60
	80			2491106	658312			10	60

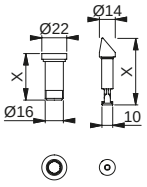



HCS® latch sets

HCS® brass latch set:
- Door type: for flush doors and rebated doors (rebate width 24 mm)
- Latch tube: brass with thread
- Latchbolt: glass fibre reinforced nylon, low-noise

Article description	Backset			F71 Article no.	F49 Article no.			P.U.	O.C.
HCS® latch set, brass	50			658176	2619317			10	60
	60			**658183**	2099649			10	60
	70			658190	2619325			10	60

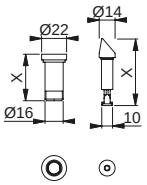



HCS® strike plates

HCS® stainless steel/brass strike plate:
- Door type: for door frames of flush doors
- Fixing: for multi-purpose screws

Article description			Dimen-sions	F69 Article no.	F71 Article no.			P.U.	O.C.
HCS® SB-A Strike plate for door frames of flush doors			39 x 70	**658206**	658220			10	60

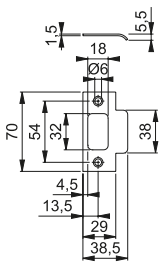



HCS® strike plates

HCS® stainless steel/brass strike plate:
- Door type: for door frames of flush doors
- Fixing: for multi-purpose screws

Article description			Dimen-sions	F69 Article no.	F71 Article no.			P.U.	O.C.
HCS® SB-C Strike plate for door frames of flush doors			32 x 92	**623082**	621255			10	60

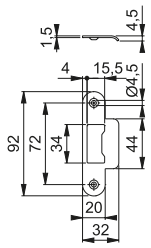



HCS® strike plates

HCS® stainless steel/brass strike plate:
- Door type: for door frames of flush doors
- Fixing: for multi-purpose screws

Article description			Dimen-sions	F69 Article no.	F71 Article no.			P.U.	O.C.
HCS® SB-D Strike plate for door frames of rebated doors			20 x 90	623075	**621248**			10	60

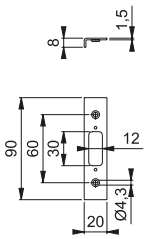

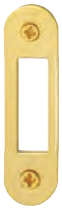

HCS® strike plates

HCS® stainless steel/brass strike plate:
- Door type: for door frames of flush doors
- Fixing: for multi-purpose screws

Article description			Dimen-sions	F69 Article no.	F71 Article no.			P.U.	O.C.
HCS® SB-E Strike plate for door frames of rebated doors			22 x 82	2574913	**2574905**			10	60

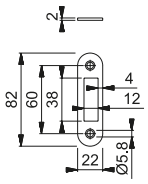



HCS® cylinder

HCS® clip-in keyed cylinder with reversible key:
- for **HCS®** models designed to incorporate a locking function
- Fixing: to be clipped in
- Note: only clip into assembled **HCS®** as cannot be disassembled again

Article description			Ø	Article no.				P.U.	O.C.
HCS® cylinder, piece			15	**591732**				10	60
HCS® cylinder, pair			15	766260				10	60
HCS® group keying, single			15	782796				10	60
HCS® group keying, double			15	780952				10	60
HCS® group keying, group key			15	781485				10	60

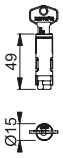





HCS® Clip-in components – aluminium

1) **HCS®** aluminium clip-in turn:
- for **HCS®** models designed to incorporate a non-keyed locking function
- Fixing: to be clipped in
- Note: only clip into assembled **HCS®** as cannot be disassembled again

2) **HCS®** large aluminium clip-in turn:
- for **HCS®** models designed to incorporate a non-keyed locking function
- Fixing: to be clipped in
- Note: only clip into assembled **HCS®** as cannot be disassembled again

3) **HCS®** aluminium clip-in emergency release:
- for **HCS®** models designed to incorporate a non-keyed locking function
- Fixing: to be clipped in
- Note: only clip into assembled **HCS®** as cannot be disassembled again

Article description				F1-2 Article no.	F9-2 Article no.			P.U.	O.C.
1) OL-15				**2574921**	2574964			10	60
2) OL-15-SEN				**2574956**	2574981			10	60
3) SK-15				**2574948**	2574972			10	60

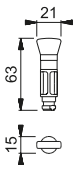

OL-15

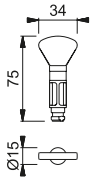

OL-15-SEN

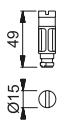

SK-15



HCS® Clip-in components – brass

1) **HCS®** brass clip-in turn:
- for **HCS®** models designed to incorporate a non-keyed locking function
- Fixing: to be clipped in
- Note: only clip into assembled **HCS®** as cannot be disassembled again

2) **HCS®** brass clip-in emergency release:
- for **HCS®** models designed to incorporate a non-keyed locking function
- Fixing: to be clipped in
- Note: only clip into assembled **HCS®** as cannot be disassembled again

Article description				F41	F49	F71		P.U.	O.C.
				Article no.	Article no.	Article no.			
1) OL-15				658657	**2215890**	575121		10	60
2) SK-15				658664	**2215902**	575138		10	60

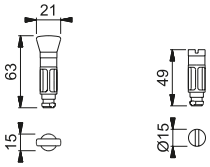



HCS® Clip-in components – nylon

1) **HCS®** nylon clip-in turn:
- for **HCS®** models designed to incorporate a non-keyed locking function
- Fixing: to be clipped in
- Note: only clip into assembled **HCS®** as cannot be disassembled again

2) **HCS®** large nylon clip-in turn:
- for **HCS®** models designed to incorporate a non-keyed locking function
- Fixing: to be clipped in
- Note: only clip into assembled **HCS®** as cannot be disassembled again

3) **HCS®** nylon clip-in emergency release with red-green-indicator:
- for **HCS®** models designed to incorporate a non-keyed locking function
- Fixing: to be clipped in
- Note: only clip into assembled **HCS®** as cannot be disassembled again

4) **HCS®** nylon clip-in emergency release:
- for **HCS®** models designed to incorporate a non-keyed locking function
- Fixing: to be clipped in
- Note: only clip into assembled **HCS®** as cannot be disassembled again

Article description				F7016M	F9005M	F9010M		P.U.	O.C.
				Article no.	AArticle no.	Article no.			
1) OL-15				2574833	**572717**	2574702		10	60
2) OL-15-SEN					**822003**	2574796		10	60
3) RGSK-15					**658152**	2574745		10	60
4) SK-15				2574841	**572724**	2574711		10	60

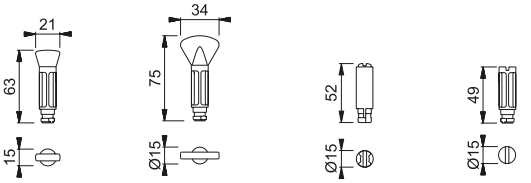

OL-15 **OL-15-SEN** **RGSK-15** **SK-15**

Programme for sliding doors

HOPPE®
Handle of excellence.

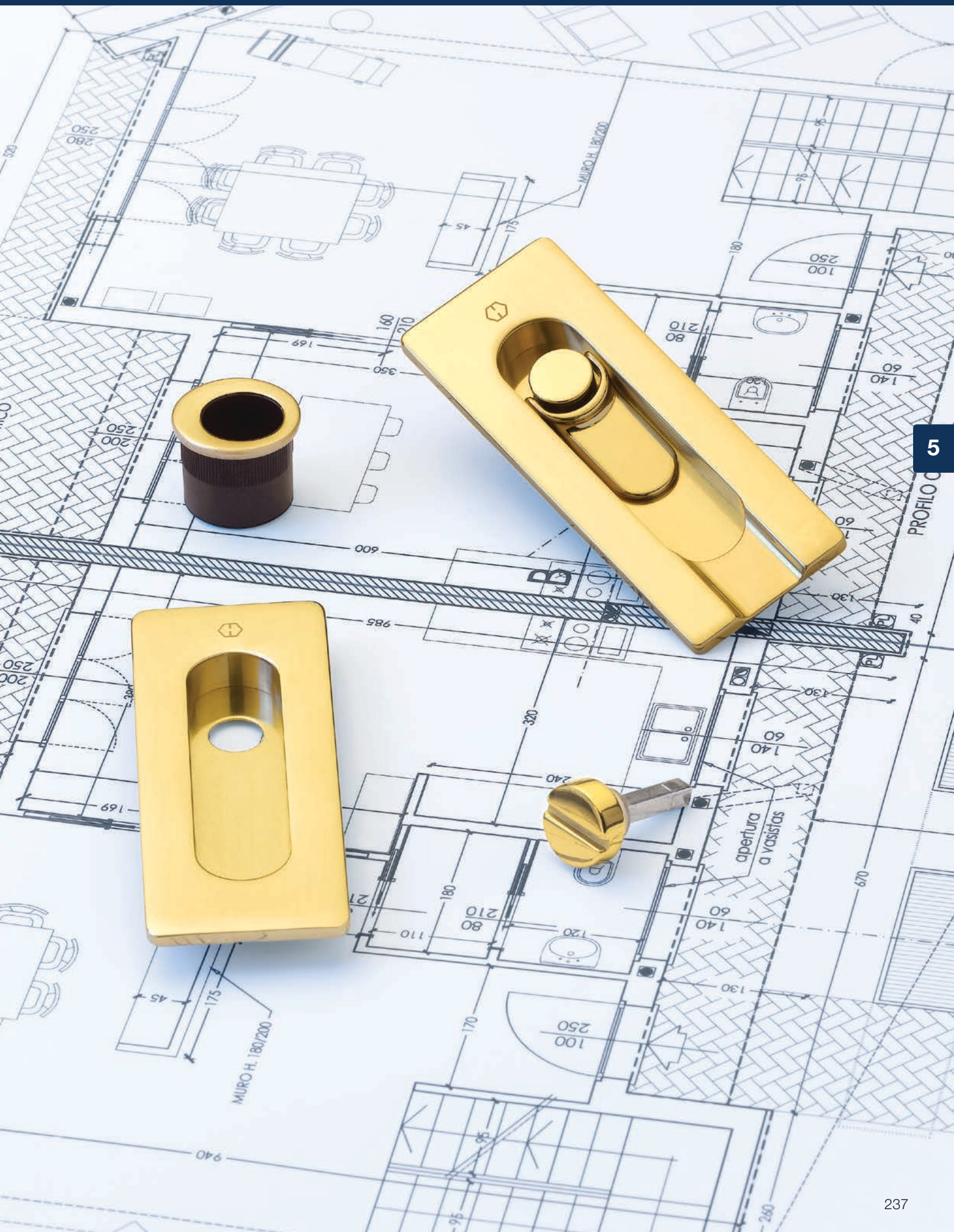

Overview programme for sliding doors



The dura**vert**® product line

for the discerning



Sliding door sets
M462
page 242



Sliding door sets
M463
page 243



The dura**plus**® product line

more than usual

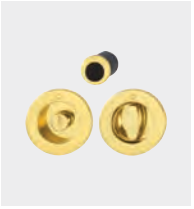

Sliding door sets
M471
page 246



Sliding door sets
M472
page 247

= Aluminium = Brass



The dura**norm**® product line

consistently good value



Sliding door sets
4920
New
page 250

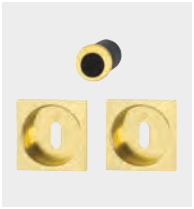

Sliding door sets
4921
New
page 252



Sliding door sets
4930
New
page 254

Programme for sliding doors





for the discerning duravert®



M462 – Set 7

HOPPE brass pocket door set 7 with emergency release/stowable turn:
- Connection: HOPPE telescopic spindle
- Base: nylon
- Fixing: concealed, recessed pulls with multi-purpose screws, finger pull for front of door with silicone or adhesive

Article description			Keyhole	F41-R	F49-R	F49-R/F41-R	F52-R/F77-R	P.U.	O.C.
				Article no.	Article no.	Article no.	Article no.		
Set 7	33 - 48	8		3207138	**3207146**	3207154	3207162	1	10

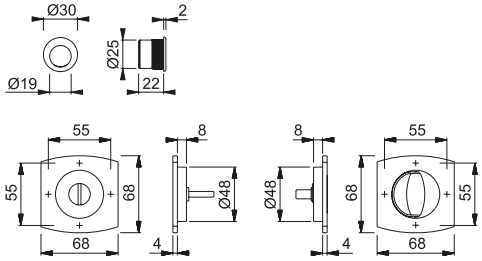

Finishes:


F41-R


F49-R


F49-R/ F41-R


F52-R/ F77-R

The Resista® guarantee applies to all finishes with the letter **R** in the finish key.

Resista®



M463 – Set 7

HOPPE brass pocket door set 7 with emergency release/stowable turn:
- Connection: HOPPE telescopic spindle
- Base: nylon
- Fixing: concealed, recessed pulls with multi-purpose screws, finger pull for front of door with silicone or adhesive

Article description			Keyhole	F41-R	F49-R	F49-R/F41-R	F52-R/F77-R	P.U.	O.C.
				Article no.	Article no.	Article no.	Article no.		
Set 7	33-48	8		**3207736**	3207744	3207752	3207761	1	10

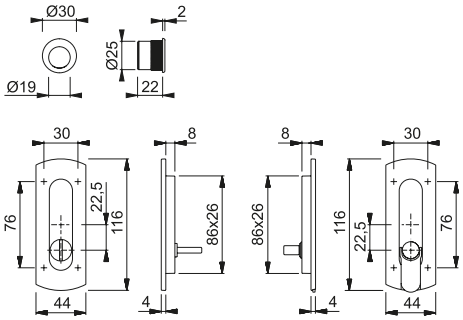

Finishes:

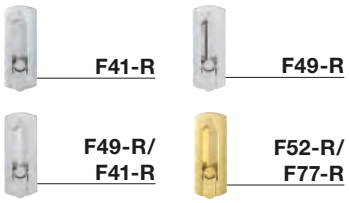

The Resista® guarantee applies to all finishes with the letter **R** in the finish key.

Resista®

5

Programme for sliding doors





more than usual duraplus®



M471 – Set 7

HOPPE brass pocket door set 7 with emergency release/stowable turn:
- Connection: HOPPE telescopic spindle
- Base: nylon
- Fixing: concealed, recessed pulls with multi-purpose screws, finger pull for front of door with silicone or adhesive

Article description			Keyhole	F41-R	F42-R	F49-R	F71	P.U.	O.C.
				Article no.	Article no.	Article no.	Article no.		
Set 7	33-48	8		3206573	3947208	3206581	**3206522**	1	10
			Keyhole	F72	F73	F77-R	F98-R	P.U.	O.C.
				Article no.	Article no.	Article no.	Article no.		
	33-48	8		3206549	3206557	3206590	3206602	1	10

Article description			Keyhole	F54	F55	F56	F76	P.U.	O.C.
				Article no.	Article no.	Article no.	Article no.		
Set 7	33-48	8		3947216	3947224	3947232	3947241	1	10

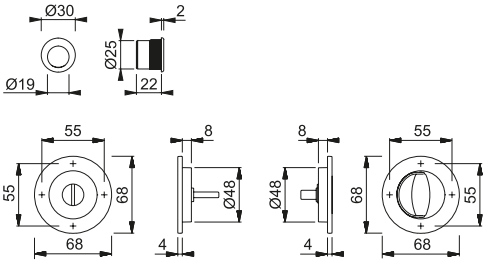

The Resista® guarantee applies to all finishes with the letter **R** in the finish key.

Resista®



M472 – Set 7

HOPPE brass pocket door set 7 with emergency release/stowable turn:

- Connection: HOPPE telescopic spindle
- Base: nylon
- Fixing: concealed, recessed pulls with multi-purpose screws, finger pull for front of door with silicone or adhesive

Article description			Keyhole	F41-R	F42-R	F49-R	F71	P.U.	O.C.
				Article no.	Article no.	Article no.	Article no.		
Set 7	33-48	8		3207285	3947540	3207293	**3207251**	1	10
			Keyhole	F72	F73	F77-R	F98-R	P.U.	O.C.
				Article no.	Article no.	Article no.	Article no.		
	33-48	8		3207269	3207277	3207306	3207314	1	10

Article description			Keyhole	F54	F55	F56	F76	P.U.	O.C.
				Article no.	Article no.	Article no.	Article no.		
Set 7	33-48	8		3947558	3947566	3947574	3947582	1	10

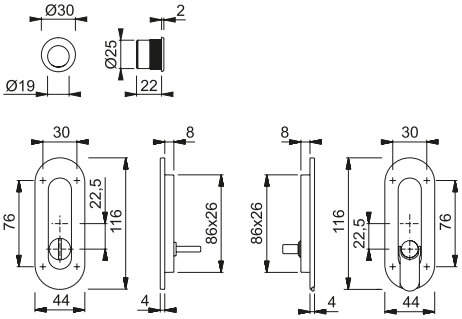

The Resista® guarantee applies to all finishes with the letter **R** in the finish key.

Resista®

5

Programme for sliding doors





consistently good value duranorm®



4920 – Set 1 New

HOPPE aluminium pocket door set 1 with emergency release/turn:
- Connection: HOPPE telescopic spindle
- Lock: hook bolt mortice lock, 50 mm backset; strike plate
- Fixing: concealed, recessed pulls by means of the HOPPE telescopic spindle; finger pull for front of door with silicone or adhesive

Article description			Keyhole	F1	F4	F94-1	F249	P.U.	O.C.
				Article no.	Article no.	Article no.	Article no.		
Set 1	38-48	8		3948059	3948067	**3948032**	3948041	1	10

Article description			Keyhole	F271*				P.U.	O.C.
				Article no.					
Set 1	38-48	8		3948024				1	10

***** Suitable for interior applications only.

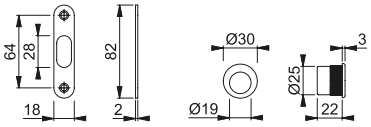

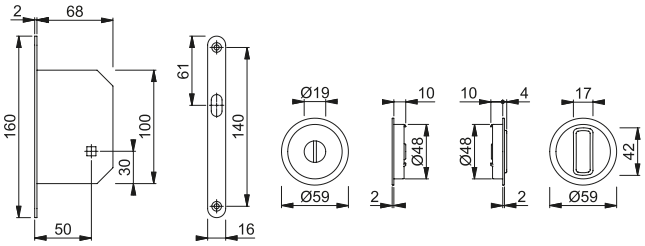



4920 – Set 2 New

HOPPE aluminium pocket door set 2 with emergency release/turn:
- Connection: HOPPE telescopic spindle
- Fixing: concealed, recessed pulls by means of the HOPPE telescopic spindle; finger pull for front of door with silicone or adhesive

Article description			Keyhole	F1	F4	F94-1	F249	P.U.	O.C.
				Article no.	Article no.	Article no.	Article no.		
Set 2	38-48	8		3947996	3948008	**3947970**	3947988	1	10

Article description			Keyhole	F271*				P.U.	O.C.
				Article no.					
Set 2	38-48	8		3947953				1	10

***** Suitable for interior applications only.

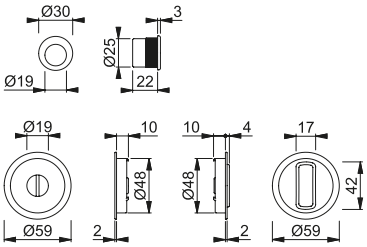



4920 – Set 3 New

HOPPE aluminium pocket door set 3:
- Lock: hook bolt mortice lock, 50 mm backset; stowable key, strike plate
- Fixing: concealed, recessed pulls by means of the HOPPE telescopic spindle; finger pull for front of door with silicone or adhesive

Article description			Keyhole	F1	F4	F94-1	F249	P.U.	O.C.
				Article no.	Article no.	Article no.	Article no.		
Set 3	35-52			3947929	3947937	**3947902**	3947911	1	10

Article description			Keyhole	F271*				P.U.	O.C.
				Article no.					
Set 3	35-52			3947890				1	10

* Suitable for interior applications only.

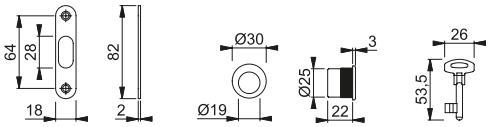

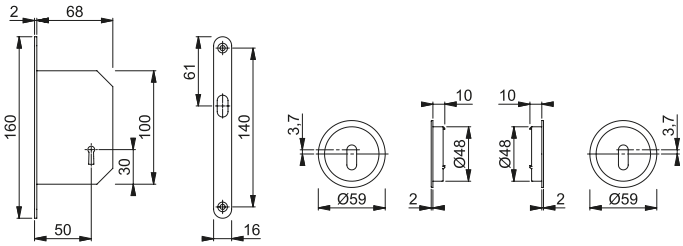



4920 – Set 5 New

HOPPE aluminium pocket door set 5:
- Fixing: concealed, recessed pulls by means of the HOPPE telescopic spindle; finger pull for front of door with silicone or adhesive

Article description			Keyhole	F1	F4	F94-1	F249	P.U.	O.C.
				Article no.	Article no.	Article no.	Article no.		
Set 5	min. 35		without	3947865	3947873	**3947849**	3947857	1	10

Article description			Keyhole	F271*				P.U.	O.C.
				Article no.					
Set 5	min. 35		without	3947831				1	10

* Suitable for interior applications only.

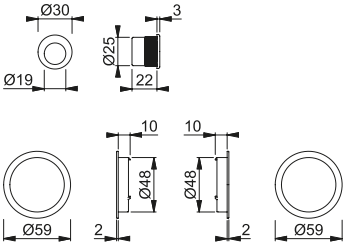

5



4921 – Set 1 New

HOPPE aluminium pocket door set 1 with emergency release/turn:
- Connection: HOPPE telescopic spindle
- Lock: hook bolt mortice lock, 50 mm backset; strike plate
- Fixing: concealed, recessed pulls by means of the HOPPE telescopic spindle; finger pull for front of door with silicone or adhesive

Article description			Keyhole	F1	F4	F94-1	F249	P.U.	O.C.
				Article no.	Article no.	Article no.	Article no.		
Set 1	38-48	8		3948278	3948286	3948251	**3948260**	1	10

Article description			Keyhole	F271*				P.U.	O.C.
				Article no.					
Set 1	38-48	8		3948235				1	10

* Suitable for interior applications only.

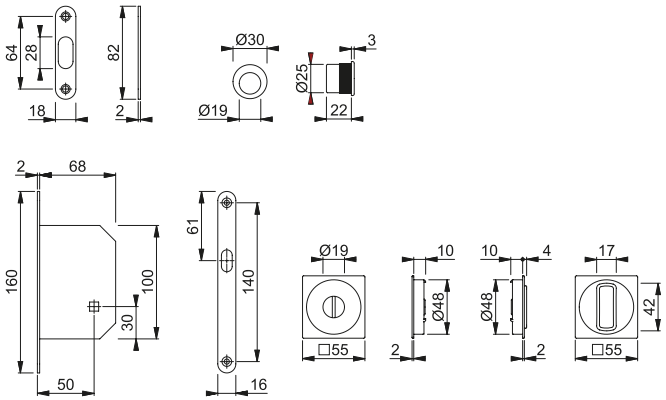



4921 – Set 2 New

HOPPE aluminium pocket door set 2 with emergency release/turn:
- Connection: HOPPE telescopic spindle
- Fixing: concealed, recessed pulls by means of the HOPPE telescopic spindle; finger pull for front of door with silicone or adhesive

Article description			Keyhole	F1	F4	F94-1	F249	P.U.	O.C.
				Article no.	Article no.	Article no.	Article no.		
Set 2	38-48	8		3948219	3948227	3948198	**3948201**	1	10

Article description			Keyhole	F271*				P.U.	O.C.
				Article no.					
Set 2	38-48	8		3948180				1	10

* Suitable for interior applications only.

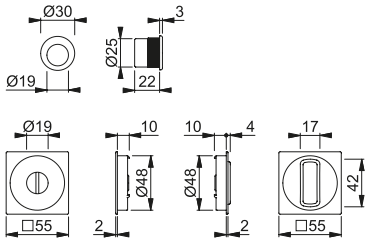



4921 – Set 3 New

HOPPE aluminium pocket door set 3:
- Lock: hook bolt mortice lock, 50 mm backset; stowable key, strike plate
- Fixing: concealed, recessed pulls by means of the HOPPE telescopic spindle; finger pull for front of door with silicone or adhesive

Article description			Keyhole	F1	F4	F94-1	F249	P.U.	O.C.
				Article no.	Article no.	Article no.	Article no.		
Set 3	35-52			3948155	3948163	3948139	**3948147**	1	10

Article description			Keyhole	F271*				P.U.	O.C.
				Article no.					
Set 3	35-52			3948121				1	10

* Suitable for interior applications only.

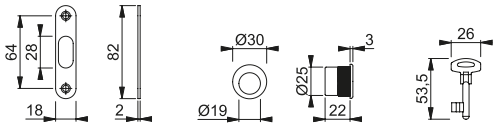

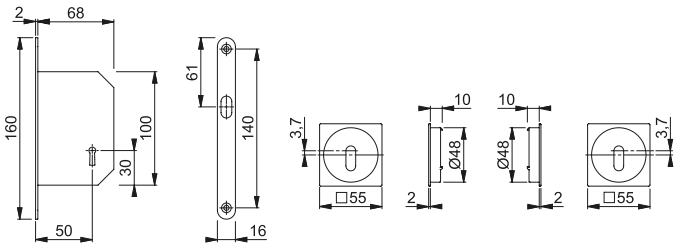



4921 – Set 5 New

HOPPE aluminium pocket door set 5:
- Fixing: concealed, recessed pulls by means of the HOPPE telescopic spindle; finger pull for front of door with silicone or adhesive

Article description			Keyhole	F1	F4	F94-1	F249	P.U.	O.C.
				Article no.	Article no.	Article no.	Article no.		
Set 5	min. 35		without	3948104	3948112	3948083	**3948091**	1	10

Article description			Keyhole	F271*				P.U.	O.C.
				Article no.					
Set 5	min. 35		without	3948075				1	10

* Suitable for interior applications only.

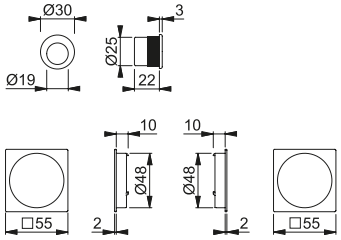

5



4930 – Set 1 New

HOPPE aluminium pocket door set 1 with emergency release/turn:
- Connection: HOPPE telescopic spindle
- Lock: hook bolt mortice lock, 50 mm backset; strike plate
- Fixing: visible, recessed pulls by means of the HOPPE telescopic spindle with multi-purpose screws; finger pull for front of door with silicone or adhesive

Article description			Keyhole	F1	F4	F94-1	F249	P.U.	O.C.
				Article no.	Article no.	Article no.	Article no.		
Set 1	38-48	8		3948526	3948534	3948497	3948500	1	10

Article description			Keyhole	F271*				P.U.	O.C.
				Article no.					
Set 1	38-48	8		**3948489**				1	10

* Suitable for interior applications only.

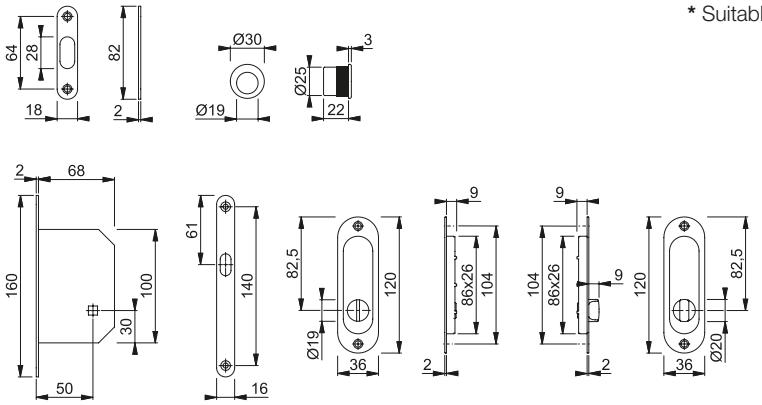



4930 – Set 2 New

HOPPE aluminium pocket door set 2 with emergency release/turn:
- Connection: HOPPE telescopic spindle
- Fixing: visible, recessed pulls by means of the HOPPE telescopic spindle with multi-purpose screws; finger pull for front of door with silicone or adhesive

Article description			Keyhole	F1	F4	F94-1	F249	P.U.	O.C.
				Article no.	Article no.	Article no.	Article no.		
Set 2	38-48	8		3948454	3948462	3948438	3948446	1	10

Article description			Keyhole	F271*				P.U.	O.C.
				Article no.					
Set 2	38-48	8		**3948420**				1	10

* Suitable for interior applications only.

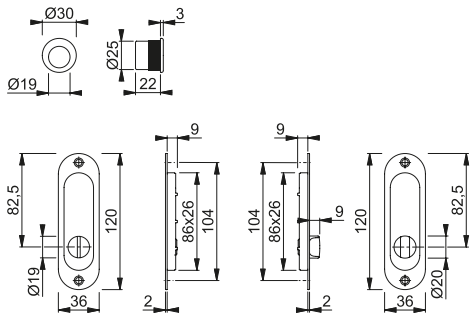



4930 – Set 3 New

HOPPE aluminium pocket door set 3:
- Lock: hook bolt mortice lock, 50 mm backset; stowable key, strike plate
- Fixing: visible, recessed pulls by means of the HOPPE telescopic spindle with multi-purpose screws; finger pull for front of door with silicone or adhesive

Article description			Keyhole	F1	F4	F94-1	F249	P.U.	O.C.
				Article no.	Article no.	Article no.	Article no.		
Set 3	35-52			3948403	3948411	3948382	3948391	1	10

Article description			Keyhole	F271*				P.U.	O.C.
				Article no.					
Set 3	35-52			**3948374**				1	10

* Suitable for interior applications only.

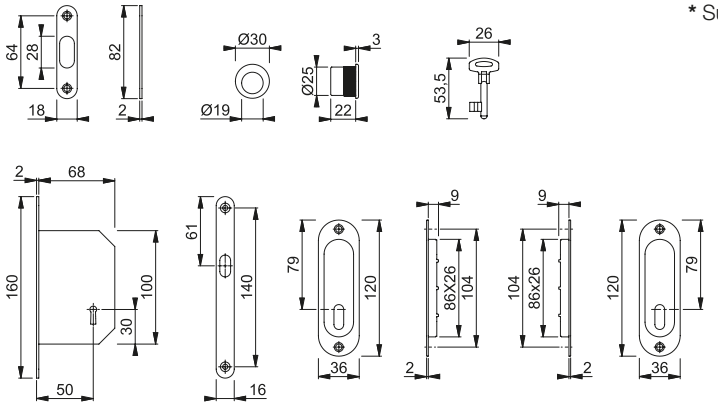



4930 – Set 5 New

HOPPE aluminium pocket door set 5:
- Fixing: visible, recessed pulls by means of the HOPPE telescopic spindle with multi-purpose screws; finger pull for front of door with silicone or adhesive

Article description			Keyhole	F1	F4	F94-1	F249	P.U.	O.C.
				Article no.	Article no.	Article no.	Article no.		
Set 5	min. 35		without	3948331	3948340	3948315	3948323	1	10

Article description			Keyhole	F271*				P.U.	O.C.
				Article no.					
Set 5	min. 35		without	**3948307**				1	10

* Suitable for interior applications only.

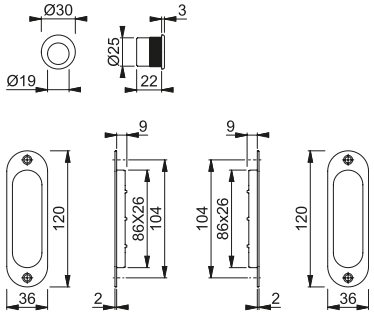

HOPPE®
Handle of excellence.



Overview pull handles



The dura**vert**® product line

for the discerning



Athinai
M516
page 262



Monte Carlo
M550LG
page 265

= Aluminium = Stainless steel = Brass



The duraplus® product line

more than usual

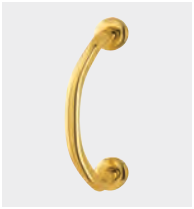

Cannes
M545
page 268



Dallas
M543
page 269



Vitória
M515
page 269



Pull handles which cover all series
page 270

Pull handles





for the discerning duravert®



M516

HOPPE brass bow-shaped pull handle:
- Fixing: concealed, pull handle fixing system no. 11

Article description		Distance	F49/F69 Article no	F77-R Article no	F77-R/F52-R Article no		P.U.	O.C.
Pull handle, piece		250	**1894384**	1894499	3043858		1	5

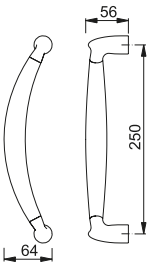

Included fixing systems:

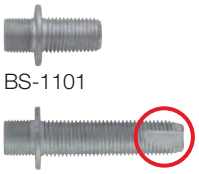

BS-1101

BS-1102

Fixing systems for pull handles see on pages 294-296.

Two-tone finishes:

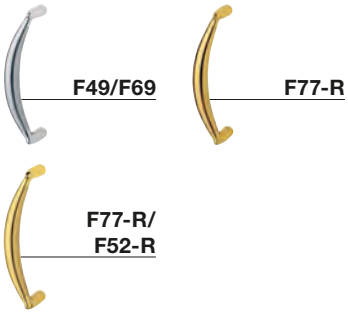

The Resista® guarantee applies to all finishes with the letter **R** in the finish key.

Resista®

Further solutions:
Interior door handle.....22
HCS®-door handle.....210



M516/19

HOPPE brass bow-shaped pull handle with roses:
- Fixing: concealed, multi-purpose screws

Article description		Distance	F49/F69 Article no	F77-R Article no	F77-R/F52-R Article no		P.U.	O.C.
Pull handle, piece		250	**2829912**	1791908	3054696		1	5

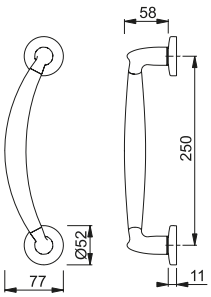

Included fixing systems for wooden doors:



Further solutions:
Interior door handle.....22
HCS®-door handle.....210

Two-tone finishes:

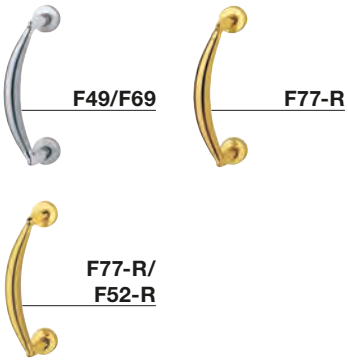

The Resista® guarantee applies to all finishes with the letter **R** in the finish key.

Resista®



M517

HOPPE brass straight pull handle:
- Fixing: concealed, pull handle fixing system no. 11

Article description		Distance	F49/F69 Article no.	F77-R Article no.	F77-R/F52-R Article no.		P.U.	O.C.
Pull handle, piece		250	**1894675**	1894712	3054717		1	5

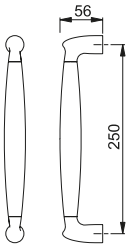

Included fixing systems:



BS-1101



BS-1102

Fixing systems for pull handles see on pages 294-296.

Two-tone finishes:

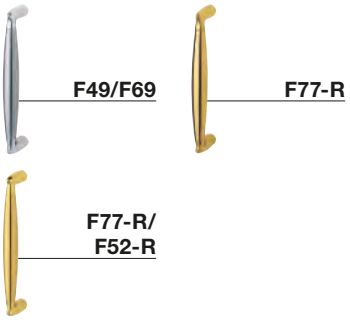

The Resista® guarantee applies to all finishes with the letter **R** in the finish key.

Resista®

Further solutions:
Interior door handle.....22
HCS®-door handle.....210



M517/19

HOPPE brass straight pull handle with roses:
- Fixing: concealed, multi-purpose screws

Article description		Distance	F49/F69 Article no.	F77-R Article no.	F77-R/F52-R Article no.		P.U.	O.C.
Pull handle, piece		250	**2829921**	1791916	3054709		1	5

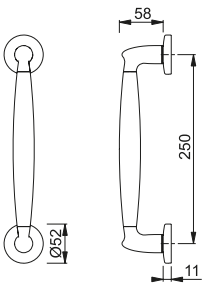

Included fixing systems for wooden doors:



Further solutions:
Interior door handle.....22
HCS®-door handle.....210

Two-tone finishes:

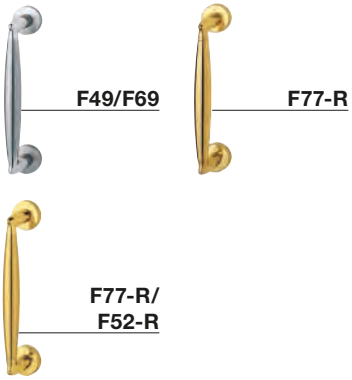

The Resista® guarantee applies to all finishes with the letter **R** in the finish key.

Resista®



M5170/19

HOPPE brass straight pull handle with roses:
- Fixing: concealed, multi-purpose screws

Article description		Distance	F41-R Article no.	F77-R Article no.			P.U.	O.C.
Pull handle, piece		190	2493451	**3126207**			1	5

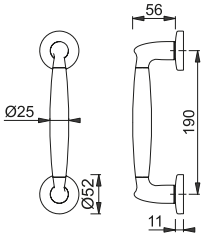

Included fixing systems for wooden doors:



Two-tone finishes:



The Resista® guarantee applies to all finishes with the letter **R** in the finish key.

Resista®

Further solutions:
Interior door handle.....22
HCS®-door handle.....210



M550LG

HOPPE brass bow-shaped pull handle:
- Fixing: concealed, pull handle fixing system no. 11

Article description		Distance	F46-R Article no	F65-R Article no	F74-R Article no	F75-R Article no	P.U.	O.C.
Pull handle, piece		250	2301886	2301894	**2301907**	2301915	1	5

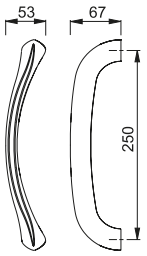

Included fixing systems:



BS-1101

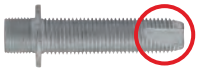

BS-1102

Fixing systems for pull handles see on pages 294-296.

Two-tone finishes:



F46-R



F65-R



F74-R



F75-R

The Resista® guarantee applies to all finishes with the letter **R** in the finish key.

Resista®

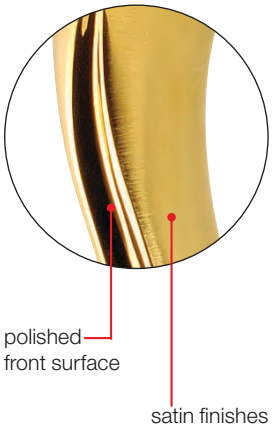

With the F75-R finish, the rose and upper and lower surfaces of the handle are polished and the front surface is satin.

Further solution:
Interior door handle.....56

Pull handles





more than usual **duraplus®**



M545LG/23

HOPPE brass bow-shaped pull handle with roses:
- Fixing: concealed, multi-purpose screws

Article description	Pull handle Ø	Distance	F41-R	F49-R	F71	F72	P.U.	O.C.
			Article no.	Article no.	Article no.	Article no.		
Pull handle, piece	dependent on form	220	2664134	2664142	2664118	2664126	1	5

Article description	Pull handle Ø	Distance	F73	F77-R			P.U.	O.C.
			Article no.	Article no.				
Pull handle, piece	dependent on form	220	2667116	**2664151**			1	5

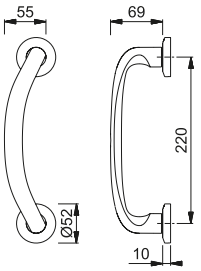

Included fixing systems for wooden doors:



The Resista® guarantee applies to all finishes with the letter **R** in the finish key.

Resista®

Further solution:
Interior door handles.....80



M545LG

HOPPE brass bow-shaped pull handle:
- Fixing: concealed, pull handle fixing system no. 11

Article description	Pull handle Ø	Distance	F41-R	F49-R	F71	F72	P.U.	O.C.
			Article no.	Article no.	Article no.	Article no.		
Pull handle, piece	dependent on form	220	2664089	2664097	2664062	2664071	1	5

Article description	Pull handle Ø	Distance	F73	F77-R			P.U.	O.C.
			Article no.	Article no.				
Pull handle, piece	dependent on form	220	2667108	**2664100**			1	5

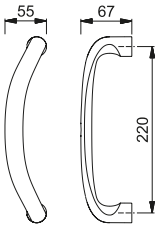

Included fixing systems:



BS-1101

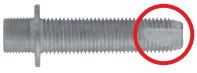

BS-1102

Fixing systems for pull handles see on pages 294-296.

The Resista® guarantee applies to all finishes with the letter **R** in the finish key.

Resista®

Further solution:
Interior door handles.....80



M543

HOPPE brass straight pull handle:
- Fixing: concealed, pull handle fixing system no. 11

Article description		Distance	F41-R Article no.	F49-R Article no.	F71 Article no.	F77-R Article no.	P.U.	O.C.
Pull handle, piece		250	**3391191**	3391203	3391174	3391211	1	5

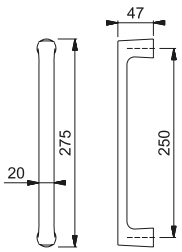

Included fixing systems:

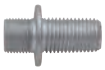

BS-1101



BS-1102

Fixing systems for pull handles see on pages 294-296.

The Resista® guarantee applies to all finishes with the letter **R** in the finish key.

Resista®

Further solution:
Interior door handle.....89



M515LG/23

HOPPE brass bow-shaped pull handle with roses:
- Fixing: concealed, multi-purpose screws

Article description	Pull handle Ø	Distance	F41-R Article no.	F49-R Article no.	F71 Article no.	F72 Article no.	P.U.	O.C.
Pull handle, piece	dependent on form	210	**2844830**	2844821	2844784	2844805	1	5

Article description	Pull handle Ø	Distance	F73 Article no.	F77-R Article no.			P.U.	O.C.
Pull handle, piece	dependent on form	210	2844813	2844848			1	5

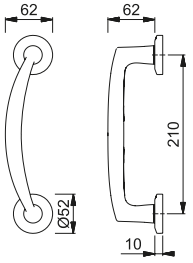

Included fixing systems for wooden doors:



The Resista® guarantee applies to all finishes with the letter **R** in the finish key.

Resista®

Further solution:
Interior door handles..... 151

Pull handles (Aluminium)



5010

HOPPE aluminium straight pull handle:
- Fixing: concealed, pull handle fixing system no. 11

Article description	Pull handle Ø	Distance	F1-2 Article no.				P.U.	O.C.
Pull handle, piece	30	300	**609253**				1	5
		350	655908				1	5

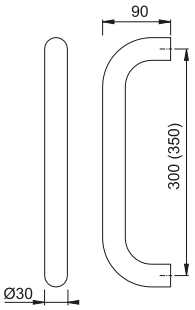

Included fixing systems:

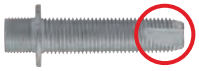

BS-1102

Fixing systems for pull handles see on pages 294-296.



5004

HOPPE aluminium bar-shaped pull handle:
- Supports: cranked
- Fixing: concealed, pull handle fixing system no. 11

Article description	Pull handle Ø	Length/ Distance	F1-2 Article no.	F9-2 Article no.			P.U.	O.C.
Pull handle, piece	25	330/210	2345942	**2345951**			1	5

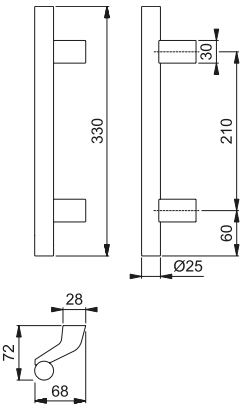

Included fixing systems:



BS-1101

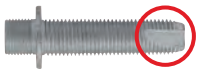

BS-1102

Fixing systems for pull handles see on pages 294-296.



5004DR with design-rings

HOPPE aluminium bar-shaped pull handle with design elements:
- Design elements: 2 grooves on each end of the handle bar
- Supports: cranked
- Fixing: concealed, pull handle fixing system no. 11

Beschreibung	Pull handle Ø	Length/ Distance	F1-2 Article no.	F9-2 Article no.			P.U.	O.C.
Pull handle, piece	25	330/210	2346179	**2346195**			1	5

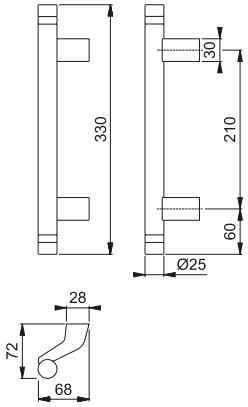

Included fixing systems:



BS-1101

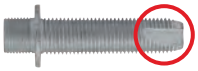

BS-1102

Fixing systems for pull handles see on pages 294-296.



5040

HOPPE aluminium straight pull handle (interior):
- Fixing: for pull handle fixing system S-1 M8 (in pairs) or S-2 M8 (on one side)

Article description	Pull handle Ø	Distance	F1 Article no.	F9 Article no.			P.U.	O.C.
Pull handle, piece (interior)	20	220	**605477**	605484			1	5
Pull handle, piece (exterior)			678013	693900			1	5

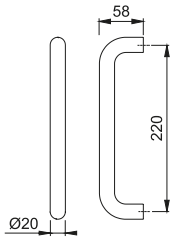

Fixing systems for pull handles see on pages 294-296.

Pull handles (Aluminium)



5210

HOPPE aluminium triangular pull handle:
- Fixing: concealed, pull handle fixing system no. 11

Article description	Pull handle Ø	Distance	F1-2 Article no.				P.U.	O.C.
Pull handle, piece	30	300	**655946**				1	5
		350	606269				1	5

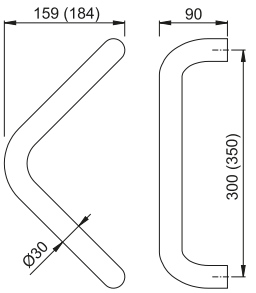

Included fixing systems:



BS-1102

Fixing systems for pull handles see on pages 294-296.



5310

HOPPE aluminium semi-circular pull handle:
- Fixing: concealed, pull handle fixing system no. 11

Article description	Pull handle Ø	Distance	F1-2 Article no.				P.U.	O.C.
Pull handle, piece	30	300	**807215**				1	5
		350	655953				1	5

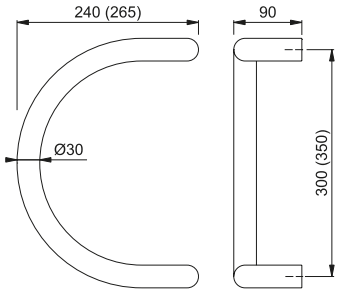

Included fixing systems:

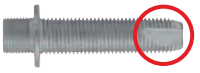

BS-1102

Fixing systems for pull handles see on pages 294-296.



5710

HOPPE aluminium straight pull handle:
- Fixing: concealed, pull handle fixing system no. 11

Article description	Pull handle Ø	Distance	F1-2 Article no.	F9-2 Article no.			P.U.	O.C.
Pull handle, piece	dependent on form	300	**2550882**	2550891			1	5

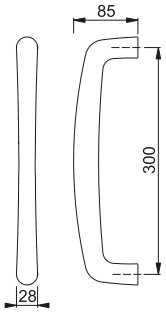

Included fixing systems:

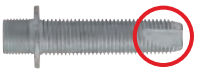

BS-1102

Fixing systems for pull handles see on pages 294-296.



E5000 – E5010

HOPPE stainless steel straight pull handle:
- Fixing: concealed, pull handle fixing system no. 11

Article description	Pull handle Ø	Distance	F69 Article no.	F77-R Article no.			P.U.	O.C.
Pull handle E5000, piece	25	300	553648	**832965**			1	5
		350	602551	1693048			1	5
Pull handle E5010, piece	30	300	556144				1	5
		350	602599				1	5

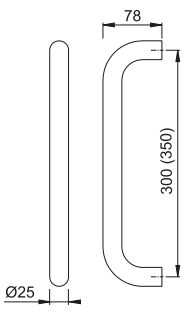

E5000

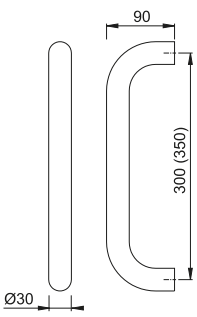

E5010

The Resista® guarantee applies to all finishes with the letter **R** in the finish key.

Resista®

Included fixing systems:



BS-1102

Fixing systems for pull handles see on pages 294-296.



E5011

HOPPE stainless steel bar-shaped pull handle:
- Supports: round, straight
- Fixing: concealed, pull handle fixing system no. 11

Article description	Pull handle Ø	Length/ Distance	F69 Article no.				P.U.	O.C.
Pull handle, piece	30	400/300	**6520605**				1	5
		500/300	2010595				1	5
		600/400	2010624				1	5
		800/560	2010632				1	5
		1000/700	2010659				1	5
		1200/900	2010974				1	5
		1400/1000	2010982				1	5
		1600/1200	2011029				1	5
		1800/1300	2011037				1	5

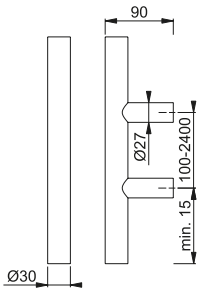

Special lengths on request. Surcharge for special lengths per started 100 mm. **When ordering pull handles of special lengths please indicate exact lengths of handle required and the distance! (necessary for the positioning of the supports).**

Also available with several supports.

Included fixing systems:

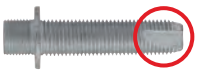

BS-1102

Fixing systems for pull handles see on pages 294-296.



E5012

HOPPE stainless steel bar-shaped pull handle:
- Supports: round, inclined at an angle of 45°
- Fixing: concealed, pull handle fixing system no. 11

Article description	Pull handle Ø	Length/ Distance	F69 Article no.				P.U.	O.C.
Pull handle, piece	30	400/300	8124414				1	5
		500/300	2011053				1	5
		600/400	**2011061**				1	5
		800/560	2011555				1	5
		1000/700	2011571				1	5
		1200/900	2011598				1	5
		1400/1000	2011643				1	5
		1600/1200	2011678				1	5
		1800/1300	2011707				1	5

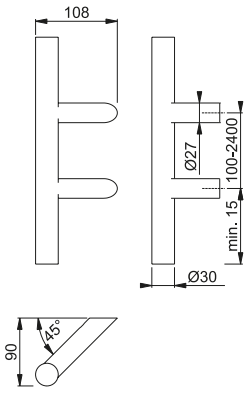

Special lengths on request. Surcharge for special lengths per started 100 mm. **When ordering pull handles of special lengths please indicate exact lengths of handle required and the distance! (necessary for the positioning of the supports).**

Also available with several supports.

Included fixing systems:

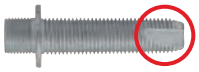

BS-1102

Fixing systems for pull handles see on pages 294-296.

Pull handles (Stainless steel)



E5014

HOPPE stainless steel bar-shaped pull handle:
- Supports: cranked, aluminium
- Fixing: concealed, pull handle fixing system no. 11

Article description	Pull handle Ø	Length/ Distance	F69/F1 Article no.				P.U.	O.C.
Pull handle, piece	30	400/250	**2206301**				1	5
		500/300	2206344				1	5
		600/400	2206387				1	5

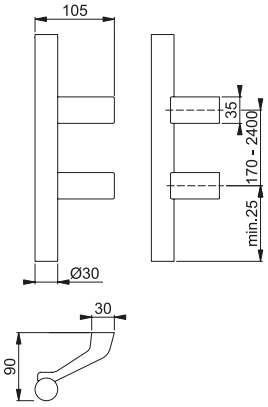

Special lengths on request. Surcharge for special lengths per started 100 mm. **When ordering pull handles of special lengths please indicate exact lengths of handle required and the distance! (necessary for the positioning of the supports).**

Also available with several supports.

Included fixing systems:

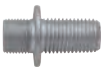
BS-1101

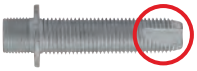
BS-1102

Fixing systems for pull handles see on pages 294-296.



E5015

HOPPE stainless steel straight pull handle, mitred corners:
- Fixing: concealed, pull handle fixing system no. 11

Article description	Pull handle Ø	Distance	F69 Article no.				P.U.	O.C.
Pull handle, piece	30	300	**2206766**				1	5
		350	2206782				1	5

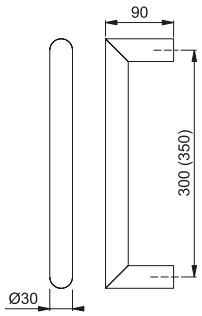

Special lengths on request. Surcharge for special lengths per started 100 mm. **When ordering pull handles of special lengths please indicate exact lengths of handle required and the distance! (necessary for the positioning of the supports).**

Also available with several supports.

Included fixing systems:


BS-1102

Fixing systems for pull handles see on pages 294-296.



E5100 – E5110

HOPPE cranked stainless steel pull handle:
- Fixing: concealed, pull handle fixing system no. 11

Beschreibung	Pull handle Ø	Distance	F69 Article no.				P.U.	O.C.
Pull handle, E5100, piece	25	300	**602575**				1	5
		350	556090				1	5
Pull handle, E5110, piece	30	300	602605				1	5
		350	610563				1	5

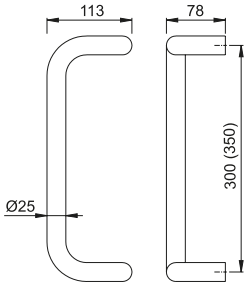

E5100

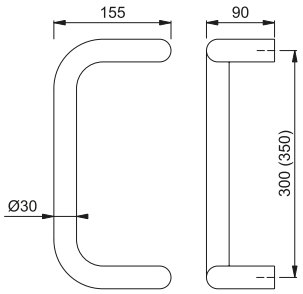

E5110

Included fixing systems:

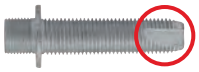

BS-1102

Fixing systems for pull handles see on pages 294-296.



E5210

HOPPE stainless steel triangular pull handle:
- Fixing: concealed, pull handle fixing system no. 11

Article description	Pull handle Ø	Distance	F69 Article no.				P.U.	O.C.
Pull handle, piece	30	300	**556106**				1	5
		350	595297				1	5

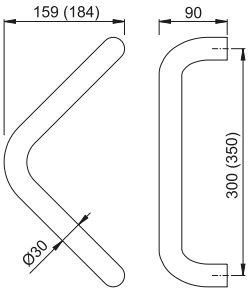

Included fixing systems:

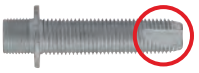

BS-1102

Fixing systems for pull handles see on pages 294-296.

Pull handles (Stainless steel)



E5215

HOPPE stainless steel triangular pull handle, mitred corners:
- Fixing: concealed, pull handle fixing system no. 11

Article description	Pull handle Ø	Distance	F69 Article no.				P.U.	O.C.
Pull handle, piece	30	300	**2206811**				1	5
		350	2206838				1	5

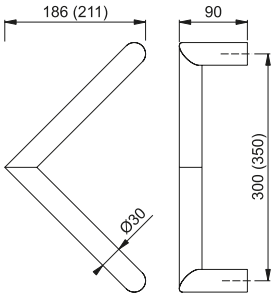

Included fixing systems:

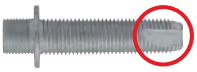

BS-1102

Fixing systems for pull handles see on pages 294-296.



E5310

HOPPE stainless steel semi-circular pull handle:
- Fixing: concealed, pull handle fixing system no. 11

Article description	Pull handle Ø	Distance	F69 Article no.				P.U.	O.C.
Pull handle, piece	30	300	**6804538**				1	5
		350	598212				1	5

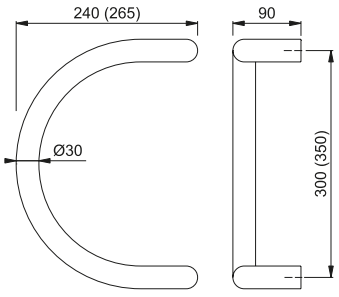

Included fixing systems:



BS-1102

Fixing systems for pull handles see on pages 294-296.



E5311

HOPPE stainless steel semi-circular pull handle:
- Supports: round, straight
- Fixing: concealed, pull handle fixing system no. 11

Article description	Pull handle Ø	Distance	F69 Article no.				P.U.	O.C.
Pull handle, piece	30	300	**588282**				1	5
		350	610617				1	5

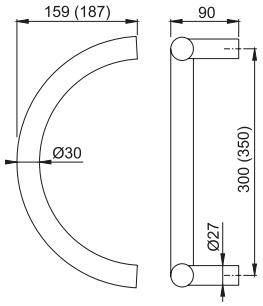

Included fixing systems:

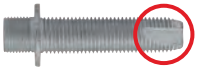

BS-1102

Fixing systems for pull handles see on pages 294-296.



E5511

HOPPE stainless steel bow-shaped pull handle:
- Supports: round, straight
- Fixing: concealed, pull handle fixing system no. 11

Article description	Pull handle Ø	Length/ Distance	F69 Article no.				P.U.	O.C.
Pull handle, piece	30	800/695	**2611059**				1	5
		1200/1000	2694851				1	5
		1600/1400	2694860	**3rd support included**			1	5
		2000/1800	2694878	**3rd support included**			1	5

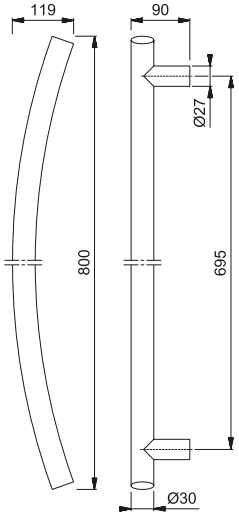

Included fixing systems:

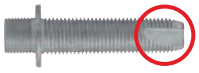

BS-1102

Fixing systems for pull handles see on pages 294-296.

Pull handles (Stainless steel)



E5600

HOPPE stainless steel bow-shaped pull handle:
- Fixing: concealed, for one-side fixing with 2 M8 screws (order separately) on aluminium and PVC doors

Article description		Length/ Distance	F69 Article no.				P.U.	O.C.
Pull handle, piece		390/350	**2206862**				1	5

Can be used for concealed fixing with two screws M8 (not included) on aluminium and nylon doors.

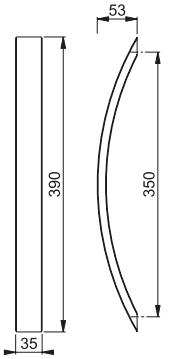

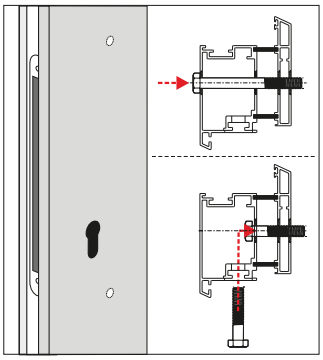

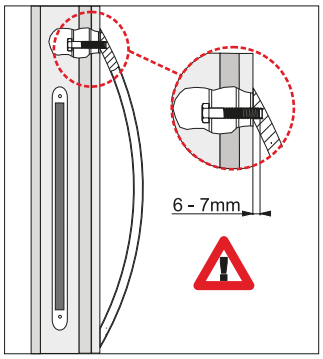



E5606

HOPPE stainless steel bow-shaped pull handle:
- Supports: angular, straight
- Fixing: concealed, pull handle fixing system no. 11

Article description		Length/ Distance	F69 Article no.				P.U.	O.C.
Pull handle, piece		408/250	**2206871**				1	5
		500/350	2420375				1	5
		697/500	2292473				1	5

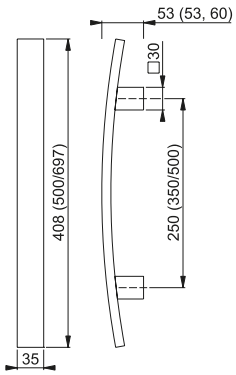

Included fixing systems:



BS-1101

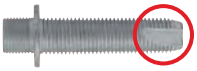

BS-1102

Fixing systems for pull handles see on pages 294-296.



M553

HOPPE brass curved, triangular pull handle:
- Fixing: concealed, pull handle fixing system no. 11

Article description	Pull handle Ø	Distance	F41-R Article no.	F73 Article no.	F77-R Article no.		P.U.	O.C.
Pull handle, piece	dependent on form	250	1885015	1843860	**1886288**		1	5

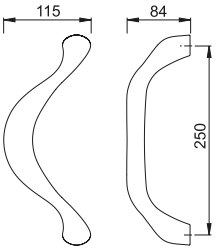

The Resista® guarantee applies to all finishes with the letter **R** in the finish key.

Resista®

Included fixing systems:

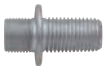

BS-1101

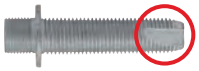

BS-1102

Fixing systems for pull handles see on pages 294-296.

HOPPE®
Handle of excellence.

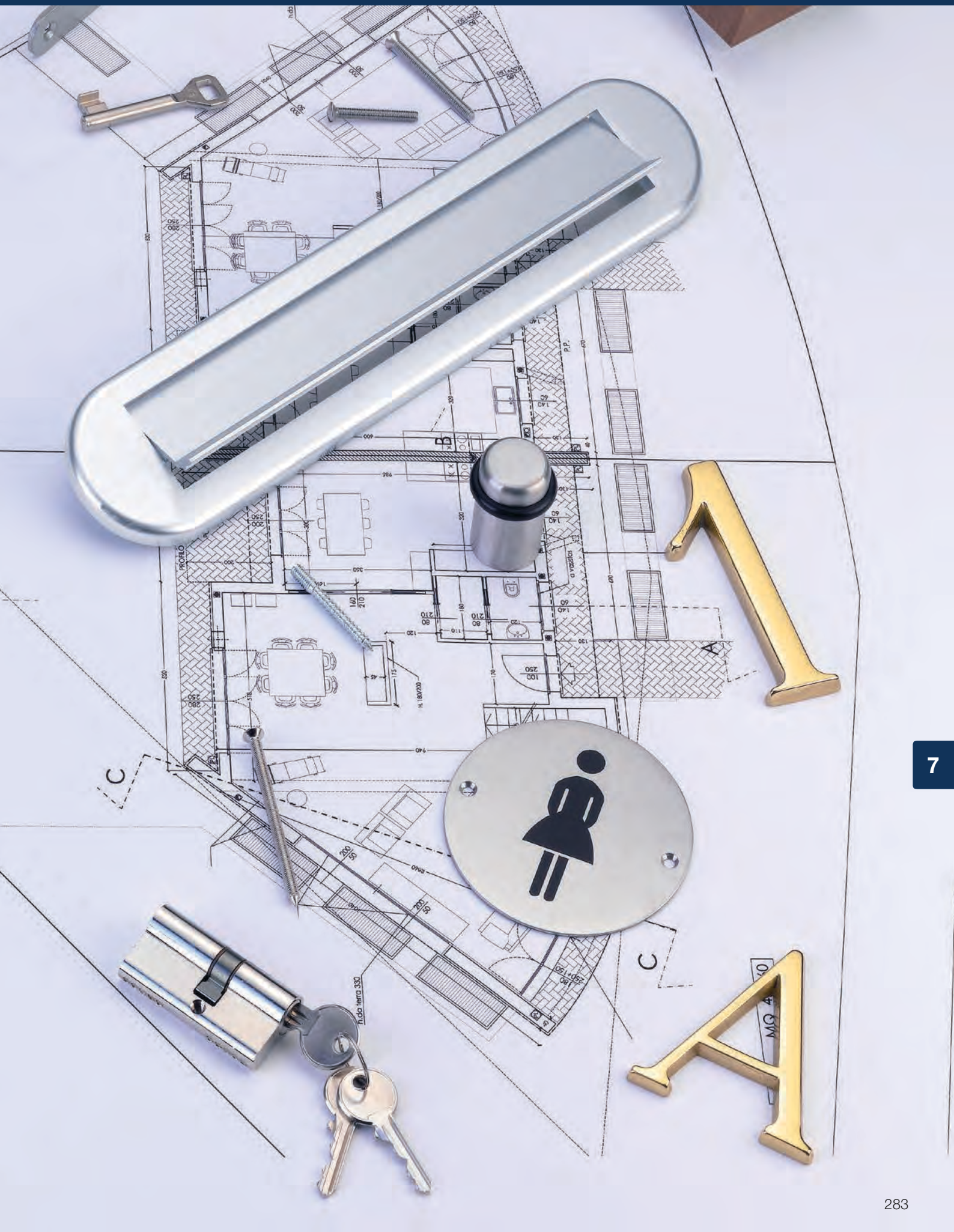

Overview complementary products



Products around door and window



Coat hooks

page 286



Door stops

page 287



Information signs

page 288

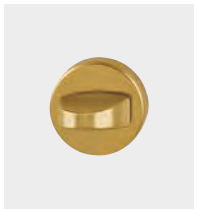

Escutcheons

page 290

= Aluminium = Stainless steel = Brass



Coat hooks (Stainless steel, brass)



E695

HOPPE stainless steel coat hook:
- Fixing: for M8 thread screw

Article description				F69 Article no.				P.U.	O.C.
Coat hook, piece				**820429**				5	30

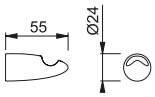



M695

HOPPE brass coat hook:
- Fixing: for M8 thread screw

Article description				F71/F72 Article no.				P.U.	O.C.
Coat hook, piece				**820412**				5	30

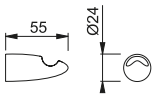



M696

HOPPE brass coat hook:
- Fixing: for M8 thread screw

Article description				F49/F41 Article no.	F71 Article no.			P.U.	O.C.
Hat and coat hook, piece				820504	**820511**			5	30

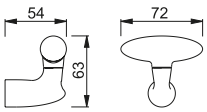

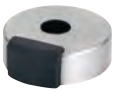

E484

HOPPE stainless steel floor fix door stop:
- With one-sided rubber buffer
- Fixing: visible, multi-purpose screw and dowel, cover cap for screw head

Article description	F69 Article no.	P.U.	O.C.
Door stop, with screw and dowel, piece	**604531**	5	25

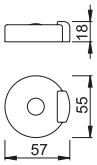



E487

HOPPE stainless steel wall fix door stop:
- With attached rubber buffer
- Fixing: concealed, multi-purpose screw and plastic dowel

Article description	F69 Article no.	P.U.	O.C.
Door stop, with screw and dowel, piece	**606511**	5	30





E497

HOPPE stainless steel floor fix door stop:
- With attached rubber buffer
- Fixing: concealed, multi-purpose screw and plastic dowel

Article description	F69 Article no.	P.U.	O.C.
Door stop, with screw and dowel, piece	**820221**	5	30

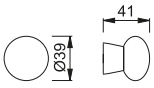

Door stops (Brass), information signs (Stainless steel)



M497

HOPPE brass fllor fix door stop:
- With attached rubber buffer
- Fixing: concealed, multi-purpose screw and plastic dowel

Article description				F71	F77-R			P.U.	O.C.
				Article no.	Article no.				
Door stop, with screw and dowel, piece				**820238**	3057011			5	30

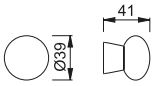

The Resista® guarantee applies to all finishes with the letter **R** in the finish key.

Resista®





E663

HOPPE stainless steel information sign:
- with lettering
- Fixing: visible, multi-purpose screws

Article description				F69				P.U.	O.C.
				Article no.					
Information sign: E663 (PUSH), piece				**605200**				5	30
Information sign: E663 (PULL), piece				**605217**				5	30

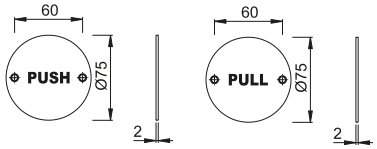

E663 (PUSH) **E663 (PULL)**







E664

HOPPE stainless steel information sign:
- with pictogram
- Fixing: visible, multi-purpose screws

Article description				F69 Article no.				P.U.	O.C.
Information sign: E664 (Disabled), piece				**605248**				5	30
Information sign: E664 (Female), piece				**605224**				5	30
Information sign: E664 (Male), piece				**605231**				5	30

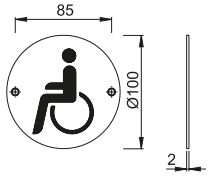

E664 (Disabled)

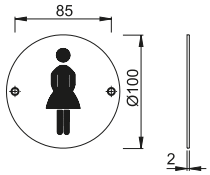

E664 (Female)

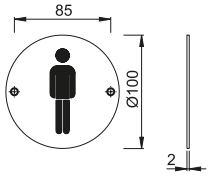

E664 (Male)







E665

HOPPE stainless steel information sign:
- with pictogram
- Fixing: visible, multi-purpose screws

Article description				F69 Article no.				P.U.	O.C.
Information sign: E665 (Disabled), piece				**605279**				5	30
Information sign: E665 (Female), piece				**605255**				5	30
Information sign: E665 (Male), piece				**605262**				5	30

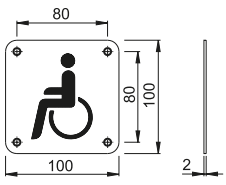

E665 (Disabled)

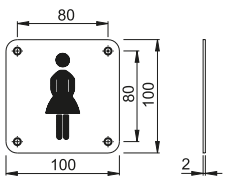

E665 (Female)

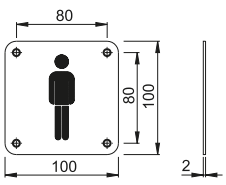

E665 (Male)



OL92/42KS (for door safety catch)

HOPPE aluminium turn on rose for door safety catches on entrance doors (interior):
- Bearing: fixed/movable turn
- Connection: HOPPE solid spindle (spindle component)
- Base: nylon
- Fixing: concealed, for multi-purpose screws

Article description			Length	F4 Article no.				P.U.	O.C.
Turn button on rose, piece		8	50	**812745**				5	30
		8	60	812752				5	30
		8	70	812769				5	30
		8	75	812783				5	30

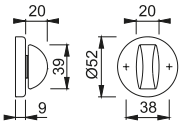



MOL91/42KS (for door safety catch)

HOPPE brass turn on rose for door safety catches on entrance doors (interior):
- Bearing: fixed/movable turn
- Connection: HOPPE solid spindle (spindle component)
- Base: nylon
- Fixing: concealed, multi-purpose screws

Article description			Length	F41 Article no.	F49 Article no.	F71 Article no.		P.U.	O.C.
Turn button on rose, piece		8	75	1652641	698554	**530021**		5	30

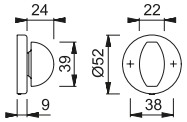

HOPPE®
Handle of excellence.

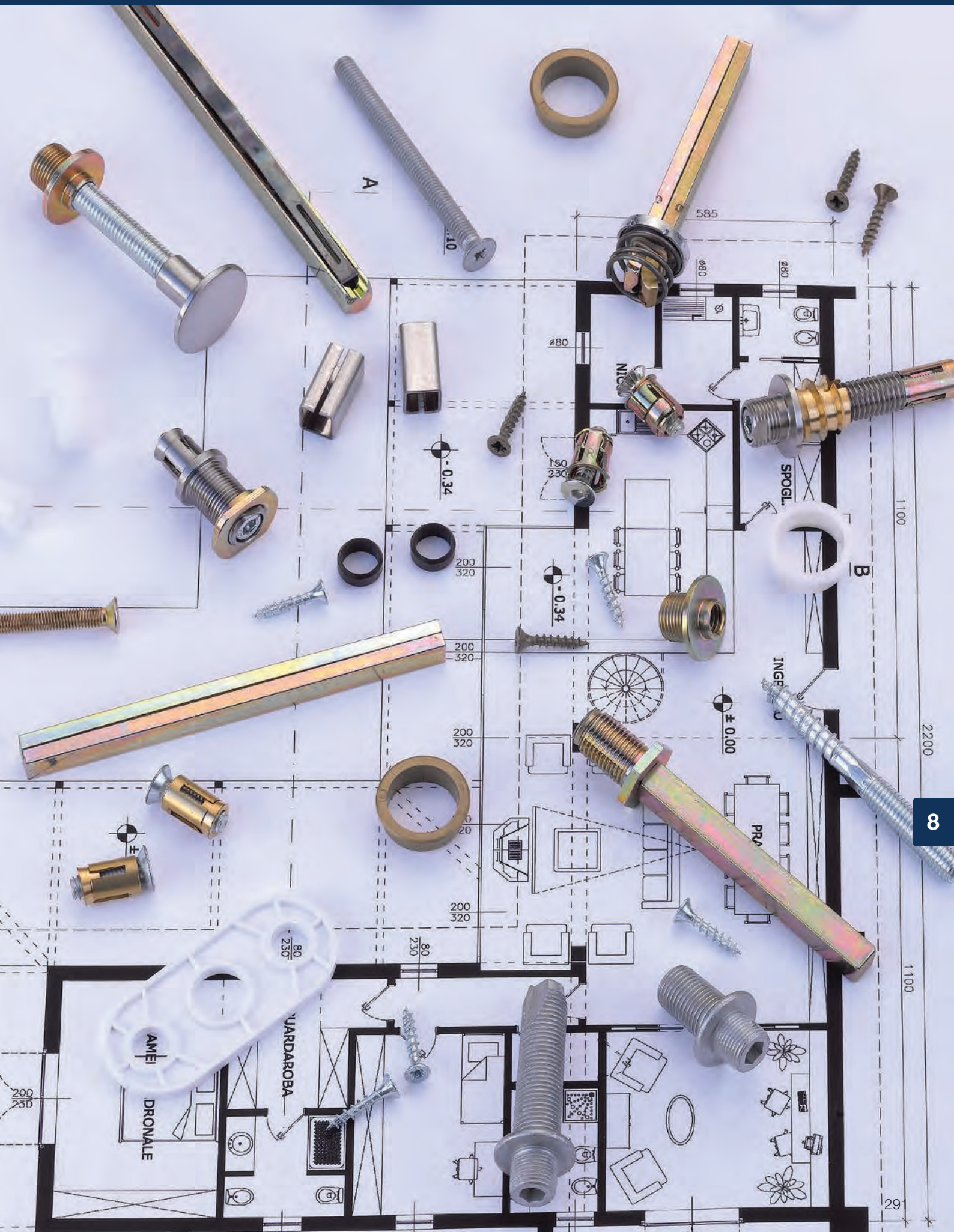

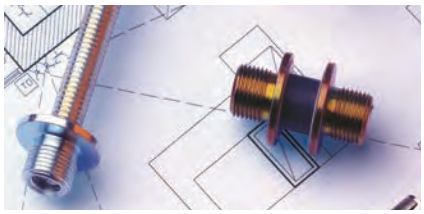

Fixing accessoires



Fixing systems for pull handles

page 294



Spindles

page 296



Fixing set for knobs

page 299



Drilling jig

page 299



Spring cassettes

page 299

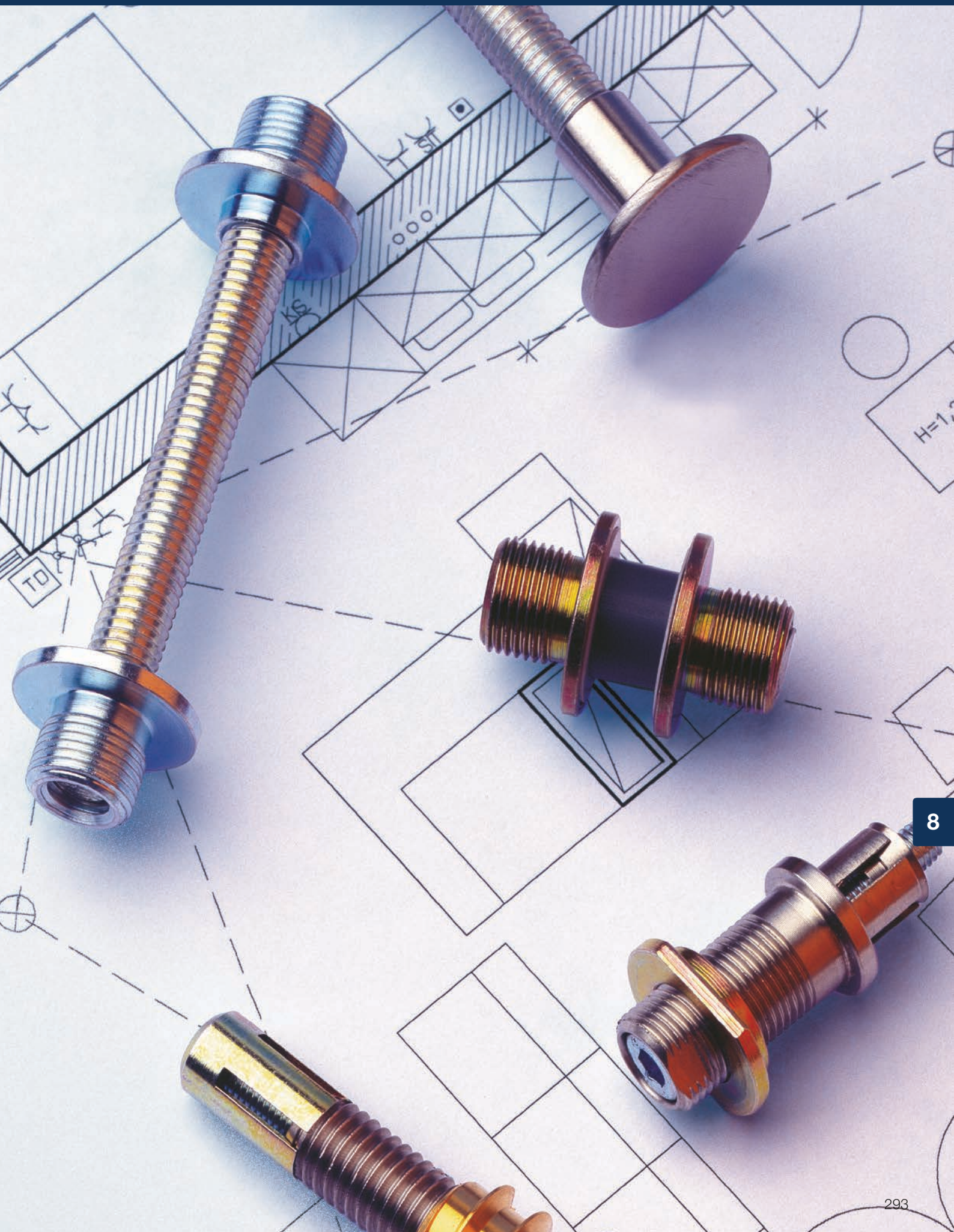

Fixing systems for pull handles

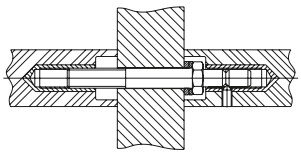

Fixing system for aluminium pull handle 5040, Ø 20 only – Type 1

HOPPE-Bügelgriff-Befestigungs-System S-1 M8:
- für paarweise Befestigung der Bügelgriffe 5040 an Aluminium-, Holz- und Kunststofftüren

Article description			Pull handle	Article no.				P.U.	O.C.
Fixing set no. S1, pair	40-50		M8 (Ø 20)	**592494**				1	10

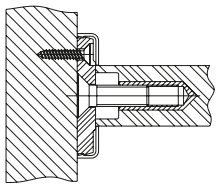

Fixing system for aluminium pull handle 5040, Ø 20 only – Type 2

HOPPE pull handle fixing system S-2 M8:
- For one-side fixing of 5040-type pull handles with roses to aluminium, wood and PVC doors

Article description			Pull handle	F1 Article no.	F9 Article no.			P.U.	O.C.
Fixing set no. S2 with rose, pair			M8 (Ø 20)	**605422**	605439			1	10



Fixing system no. 5 for pull handles

HOPPE pull handle fixing system no. 5:
- For back-to-back fixing to aluminium, wood and PVC doors

Article description				Ø 25, 30 Article no.				P.U.	O.C.
BS-501/B, piece	37-47			**600168**				1	10
BS-502/B, piece	47-57			763870				1	10
BS-503/B, piece	57-67			646753				1	10
BS-504/B, piece	67-77			649808				1	10

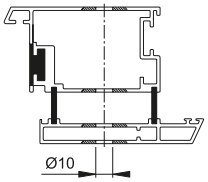

aluminium profile

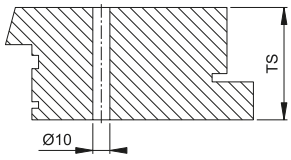

wood profile

Attention:
1 fixing system (piece) per fixing point = 2 fixing systems per pull handle.



Fixing system no. 7 for pull handles

HOPPE pull handle fixing system no. 7:
- For back-to-back fixing to glass doors

Article description				Ø 25, 30 Article no.				P.U.	O.C.
BS-701/B, piece	8-12			**573585**				1	10

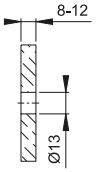

glass door

Attention:
1 fixing system (piece) per fixing point
= 2 fixing systems per pull handle.

Fixing system no. 8 for pull handles

HOPPE pull handle fixing system no. 8:
- For one-side fixing with blind rose to aluminium, wood and PVC doors

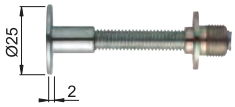

Article description		Covercap Ø	F69 Article no.				P.U.	O.C.
BS-810/B, piece	37-47	25	**6808521**				1	10
BS-811/B, piece	47-57	25	829316				1	10
BS-812/B, piece	57-67	25	820641				1	10
BS-813/B, piece	67-77	25	6808562				1	10

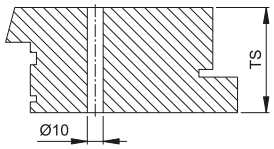

profile

Attention:
1 fixing system (piece) per fixing point
= 2 fixing systems per pull handle.



Fixing system no. 10 for pull handles

HOPPE pull handle fixing system no. 10:
- For one-side fixing to walls

Article description				Ø 25, 30 Article no.				P.U.	O.C.
BS-1001/B, piece				**763009**				1	10

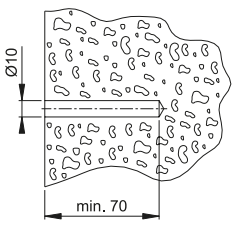

wall

Attention:
1 fixing system (piece) per fixing point
= 2 fixing systems per pull handle.

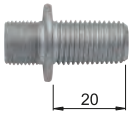

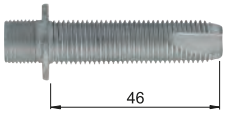

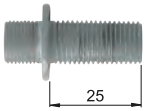

Fixing system no. 11 for pull handles

HOPPE pull handle fixing system no. 11:

- For one-side fixing to aluminium, wood and PVC doors in the mortice area (please observe deviating pre-chamber [V] dimensions for PVC profiles)

Article description	threaded length	V-measure Nylon profiles	Article no.				P.U.	O.C.
BS-1101/short, piece	20	11-16	**1841717**				1	10
BS-1102/long, piece	46	-	1841733				1	10
BS-1103/middle, piece	25	21-26	2149116				1	10

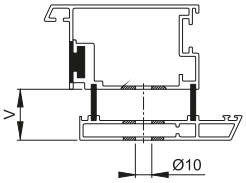

aluminium profile

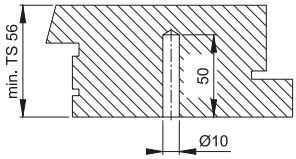

wood profile

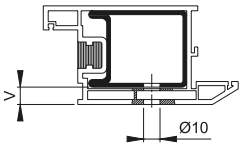

PVC profile

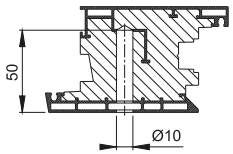

Pural profile



Solid spindle

HOPPE iron solid spindle:

Article description			Length	zinc-plated Article no.				P.U.	O.C.
Solid spindle, piece		7	60	**519071**				10	10
			70	519095				10	500
			80	519118				10	10
		8	110	519163				10	10
			120	519170				10	10
			130	519187				10	10

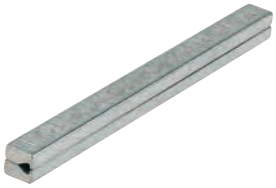

Profile spindle

HOPPE iron profile spindle:

Article description			Length	zinc-plated Article no.				P.U.	O.C.
Profile spindle, piece		8	100	**517572**				10	10
			110	517596				10	10
			120	517565				10	10
			130	672578				10	10
			140	517589				10	10
			150	693078				10	10
			160	519200				10	10



Expanding spindle

HOPPE iron expanding efha-spindle:
- With efha slot
- For entrance doors drilled on one side
- For aluminium, stainless steel, nylon and brass half sets
- Suitable also for **HOPPE Quick-Fit connection**

Article description			Length	zinc-plated Article no.				P.U.	O.C.
Expanding spindle, piece		8	45	1683894				10	10
			55	**518524**				10	10
			65	518531				10	10
			75	518555				10	10
			85	771967				10	10
			95	3532192				10	10



FDW-Profile spindle

HOPPE iron profile FDW-spindle:
- Exclusively for knobs (pads) on backplates and knob (pad)/handle sets with knob

Article description	Thread	⊞	Length	zinc-plated Article no.				P.U.	O.C.
FDW-Profile spindle with thread, piece	M12	8	100	**823246**				10	10
			120	823277				10	10
			140	820849				10	10

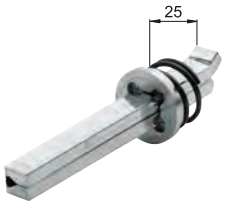

F/Ei-Profile spindle

HOPPE iron profile FEI-spindle:
- For lock follower depths of between 12-16 mm
- For entrance doors drilled on one side
- For half sets in aluminium (8 mm spindle variant only), stainless steel, nylon and brass

Article description			Length	zinc-plated Article no.				P.U.	O.C.
F/Ei-Profile spindle, for doors drilled from one side only, piece		8	70	**515073**				10	10
			90	515066				10	10

Installation of F/Ei-Profile spindle

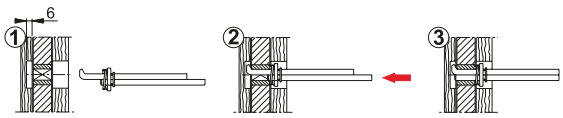



i-Solid profile spindle

HOPPE iron solid profile I-spindle:
- For entrance doors drilled on both sides, to which security hardware with push pad is fitted
- With hardened flat spring to compensate for tolerances in the lock follower

Article description		⊞	Length	zinc-plated Article no.				P.U.	O.C.
i-Solid profile spindle, for doors drilled through, piece		8	90	**8053597**				10	10
			110	6961239				10	10



Fixing set for knobs

HOPPE iron fixing set:
- For one-side fixing of knobs (pads) on rose

Article description	Ø		Length	zinc-plated Article no.				P.U.	O.C.
Fixing set for knobs	50	8	34	**2839993**				10	10



Quick-Fit

Drilling jig

HOPPE drilling jig
- For door preparation to fit the Z-RFL18 spring cassette for E29N and E29NR, E847N and E847, E848N and E848, E849N and E849 handle roses

Article description				Article no.				P.U.	O.C.
Drilling jig				**3759581**				10	100

Detailed information on HOPPE Quick-FitPlus can be found in our manual: HOPPE – Handle of excellence. Basic information manual.



Quick-Fit

Spring cassette

HOPPE Z-RFL18 spring cassette:
- Non-handed
- For E29N and E29NR, E847N and E847, E848N and E848, E849N and E849 handle roses

Article description				Article no.				P.U.	O.C.
Spring cassette				**3825024**				10	50

Detailed information on HOPPE Quick-FitPlus can be found in our manual: HOPPE – Handle of excellence. Basic information manual.



Spring cassette

HOPPE Z-RFL08 spring cassette pair:
- Non-handed spring cassette
- For M21, M25K(V), (E/M)30P, 831, M844P handle roses

Article description				Article no.				P.U.	O.C.
FDW-Profile spindle with thread, piece		8		**2839977**				10	50

HOPPE®
Handle of excellence.



9



Presentation systems



Wall display

page 304



Sample columns

page 304



Architectural hardware column displays

page 305



Counter display

page 306



Sample boards

page 306

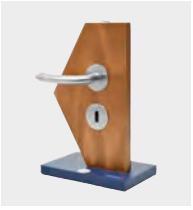

Sample blocks

page 308



Presentation cases

page 309



Sample boards with special dimensions

page 310


duraplus®
HOPPE
HOPPE
HOPPE
HOPPE
HOPPE
www.hoppe.com

Wall display and sample columns



Wall display

HOPPE wall display:
- Frame: 1 metal element to hold sample boards
- Sample boards: Walnut finish, complete with samples, lock mechanism in the case of handle sets
- Information elements: at the top

Description	sample boards	Dimensions (B x H)	Article nr.				P.U.	O.C.
Wall display, piece	8 (1 x 8)	28 x 120 cm	**2723712**				1	



Triangular column display

HOPPE triangular column display:
- base plate with three-face plinth
- Frame: 3 metal elements to hold sample boards
- Sample boards: walnut finish, complete with samples, lock mechanism in the case of handle sets
- Information displays: at the top
- Dispenser: for DIN-long leaflets

Description	sample boards	Dimensions (B x H)	Article nr.				P.U.	O.C.
Triangular column display	24 (3 x 8)	64 x 198 cm	**2653435**				1	



Star-shaped column

HOPPE star-shaped column display:
- Base plate with star-shaped plinth
- Frame: 3 metal elements to hold sample boards on both sides
- Sample boards: Walnut finish, complete with samples, lock mechanism in the case of handle sets
- Information elements: at the top
- Dispenser: for DIN-long leaflets

Description	sample boards	Dimensions (B x H)	Article nr.				P.U.	O.C.
Star-shaped column, piece	48 (6 x 8)	64 x 198 cm	**2653443**				1	



Hexagon column display

HOPPE hexagon column display:
- Base plate with six-face plinth
- Frame: 6 metal elements to hold sample boards
- Sample boards: Walnut finish, complete with samples, lock mechanism in the case of handle sets
- Information elements: at the top
- Dispenser: for DIN-long brochures

Description	sample boards	Dimensions (B x H)	Article nr.				P.U.	O.C.
Hexagon column display, piece	48 (6 x 8)	71 x 198 cm	**2653451**				1	





Architectural hardware column display

HOPPE architectural hardware column display:
- Shelf: walnut finish, 6 equally-sized compartments for packages
- Sample boards: 5 units in walnut finish, complete with samples, lock mechanism in the case of handle sets
- Without product assortment

Description	sample boards	Dimensions (B x H)	Article nr.				P.U.	O.C.
Architectural hardware column display, piece	5	61 x 24 x 161 cm	**3525785**				1	



Architectural hardware column display

HOPPE architectural hardware column display:
- Base plate with inclined shelf column, 4 compartments of various sizes
- Sample board: walnut finish, complete with samples, lock mechanism in the case of handle sets
- Without product assortment

Description		Dimensions (B x H)	Article nr.				P.U.	O.C.
Architectural hardware column display, piece		40 x 175 cm	**2160981**				1	

Counter display, sample boards



Counter display

HOPPE counter display:
- Frame: plastic, to hold sample boards
- Sample boards: Walnut finish, complete with samples, lock mechanism in the case of handle sets
- Information element: in foot part, inclined

Description	sample boards	Dimensions (B x H)	Article nr.				P.U.	O.C.
Theken-Präsentation, Stück	3	29,5 x 46,5 cm	**2723747**				1	
	6	29,5 x 46,5 cm	3772751				1	



M1-M6 sample boards

HOPPE sample board:
- Sample board: walnut finish, complete with samples, lock mechanism in the case of handle sets, bevelled edges at the top and the bottom
- Labelling: series name on the top inclined surface on the front, model description on the rear
- Attachment: unique system with plastic lugs for simple and fast attachment to or removal from the frames on the presentation systems

Description	sample boards	Dimensions (B x H)	walnut wood Article nr.				P.U.	O.C.
Sample board M1, piece	1	24 x 8,5 cm	2723801				1	
Sample board M2, piece	2	24 x 18,5 cm	2723798				1	
Sample board M3, piece	3	24 x 28,5 cm	**2723780**				1	
Sample board M4, piece	4	24 x 38,5 cm	2723771				1	
Sample board M5, piece	5	24 x 48,5 cm	2723763				1	
Sample board M6, piece	6	24 x 58,5 cm	2723755				1	

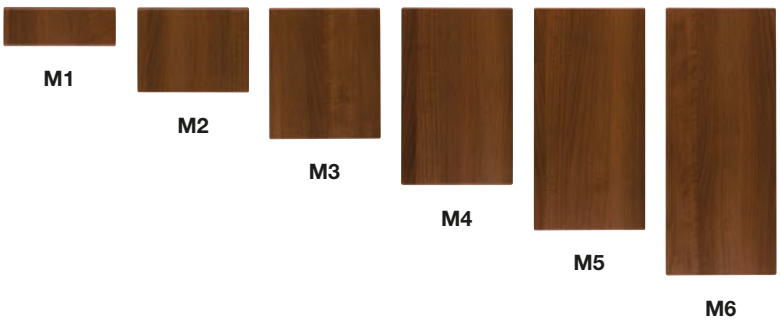



Sample board

HOPPE sample board:
- Rectangular, inclined sample board with foot, walnut finish, complete with sample, lock mechanism in the case of handle sets

Description		Dimensions (B x H)	Article nr.				P.U.	O.C.
Sample board, piece		19 x 28 cm	**2079074**				1	

Presentation systems do not belong to the core or service range.



Window handle sample board

HOPPE window handle sample board:
- Made of wood with support and carrier handle, 10 window handles

Description		Dimensions (B x H)	Article nr.				P.U.	O.C.
Window handle sample board, piece		83 x 48 cm	**1775650**				1	



Sample board

HOPPE PLEXIGLAS® sample board:
- With samples, lock mechanism in the case of handle sets

Description		Dimensions (B x H)	Article nr.				P.U.	O.C.
Sample board, piece		28 x 19 cm	**2119241**				1	



Sample board

HOPPE sample board for hardware for commercial applications:
- Rectangular sample board with support, walnut finish, lock mechanism for handle sets
- Sample assortment to request

Description		Dimensions (B x H)	Article nr.				P.U.	O.C.
Sample board for hardware for commercial applications		29 x 42 cm	**1775668**				1	



M8 HCS® sample board

HCS® sample board:
- Rectangular board, walnut finish, with 4 samples of **HCS®** hardware and 1 **HCS®** assembly example

Description		Dimensions (B x H)	Article nr.				P.U.	O.C.
M8 HCS® sample board, piece		24 x 74 cm	**2794481**				1	

Sample board and sample blocks



Window handle sample with adjustable spindle

HOPPE **Secustik®** sample with adjustable spindle:
- Foot with PLEXIGLAS® section, **Secustik®** window handle with adjustable spindle

Description		Dimensions (B x H)	Article nr.				P.U.	O.C.
Secustik® sample with adjustable spindle, piece		21 x 32 cm	**3775899**				1	



Secustik® sample

HOPPE **Secustik®** sample:
- Foot with wooden window profile, **Secustik®** window handle, mechanism to show **Secustik®** technology

Description		Dimensions (B x H)	Article nr.				P.U.	O.C.
Secustik® sample block, piece		8 x 31 cm	**1775879**				1	



Secustik® sample

HOPPE **Secustik®** sample:
- Foot with PVC window profile, **Secustik®** window handle, mechanism to show **Secustik®** technology

Description		Dimensions (B x H)	Article nr.				P.U.	O.C.
Secustik® sample block, piece		8 x 31 cm	**1775844**				1	



HCS® sample block

HCS® sample block:
- Foot with rectangular stained walnut door section, with **HCS®** hardware, assembly/disassembly key

Description		Dimensions (B x H)	Article nr.				P.U.	O.C.
HCS® sample block, piece		21 x 20 cm	**564187**				1	

Presentation systems do not belong to the core or service range.



HCS® sample block for glass doors

HCS®-GD sample block:
- Foot with rectangular PLEXIGLAS® section, with **HCS®** hardware for glass doors

Description		Dimensions (B x H)	Article nr.				P.U.	O.C.
HCS® sample block, piece		21 x 20 cm	**777402**				1	



Sample block – sliding door set

HOPPE pocket door set sample block:
- Foot with rectangular stained walnut door section, pocket door set and lock

Description		Dimensions (B x H)	walnut wood Article nr.				P.U.	O.C.
Sample block, piece		21 x 32 cm	**646098**				1	



Sample block

HOPPE sample block:
- Foot with door section in semi-hexagon shape, stained walnut door section, handle set and lock

Description		Dimensions (B x H)	Article nr.				P.U.	O.C.
Sample block, Stück		21 x 32 cm	**1775810**				1	



Window handle sample case

HOPPE window handle sample case:
- Case: metal/plastic, foamed inlays to hold samples
- Samples: 3 wood profiles, 1 wooden foot for the profiles, 10 window handles, various cover caps for window handle rosettes

Description	Dimensions (B x D x H)	Article nr.				P.U.	O.C.
Window handle sample case, piece	44,5 x 34 x 15,5 cm	**2530321**				1	

Presentation cases and sample boards



HOPPE Quick-FitPlus sample case

HOPPE Quick-FitPlus sample case:
- Case: metal/plastic, foam inlays to hold sample boards
- Samples: wooden sample blocks with locks, various door handles with fixed HOPPE solid spindle and receiver components with **HOPPE Quick-Fit connection** technology; round, square and rectangular handle roses (self-adhesive or with supporting lugs) and escutcheons (self-adhesive); assembly/disassembly material, cleaning/anti-grease tissues

Description	Dimensions (B x D x H)	Article nr.				P.U.	O.C.
HOPPE Quick-FitPlus sample case, piece	52 x 43 x 21 cm	**3420140**				1	



Sample case

HOPPE sample case:
- Case: plastic, foamed inlays to hold the sample boards
- Sample boards: walnut finish, complete with samples and lock mechanism in the case of handle sets

Description	sample boards	Dimensions (B x H)	Article nr.				P.U.	O.C.
Sample case, piece	6	43,5 x 53,5 cm	**2760249**				1	



Sample boards with special dimensions

Sample boards with special dimensions:
- Customized dimensions

Description		Dimensions (B x H)	Article nr.				P.U.	O.C.
Sample board with special dimension, piece		Please indicate!	1775730				1	

Presentation systems do not belong to the core or service range.

HOPPE®
Handle of excellence.



Overview appendix



Delivery information

page 313

§

General terms and condition of sale

page 314

1. Product informa
2. Misuse (inapprc
3. Product perforn
4. Product care
5. Duty to inform a
6. Application of re

Product reliability

page 320

Resista®

Guarantee

page 323



Conditions of use

page 325

2367375

Index – in numerical ascending order by article-number

page 326

M051/U9

Index – in numerical ascending order by design-number

page 329

Product lines
Series name
dura**vert**®
Acapulco
Athinai
Bergen
Brisbane
Capri
Genova

Produkt overview

page 331



HOPPE®
Handle of excellence.

Order quantities ....

... should be by pack unit (P.U.) and outer carton (O.C.) as indicated!
Otherwise **€ 2,50** (net) will be charged per opened outer carton.

F2 icle no.			P.U.	O.C.
01530			1	5
01556			1	5

Matching screws ...

... will be included as standard in the delivery of most HOPPE brand products.

Orders ...

... are subject to the General Conditions of Sale (see p. 314).



Product reliability ...

... of hardware systems for doors and windows. Please see details on p. 320.

Guarantee ...

... relating to Resista® and the operational guarantee. Please see further information on p. 323.

Resista®

HOPPE
10-year operational guarantee

(as per 09/2014)

General Terms and Conditions of Sale

§ 1 General – Extent of application

1. Our General Terms and Conditions of Sale shall apply exclusively; we do not recognise customers' conditions which are contrary to or different from our General Terms and Conditions of Sale, unless we have expressly agreed in writing that they shall apply. Our General Terms and Conditions of Sale shall even apply in cases in which we make delivery to the customer unreservedly although we are aware that there are conditions of the customer which are contrary to or different from our General Terms and Conditions of Sale.

2. All agreements made between us and the orderer, for the purpose of the execution of this contract, shall be laid down in writing in this contract.

3. Our General Terms and Conditions of Sale shall apply only to merchants.

4. Our General Terms and Conditions of Sale shall also apply to all future business transactions with the customer, even if in such future cases no specific reference is made to the application of these General Terms and Conditions of Sale.

§ 2 Offer – Offer documents

1. All offers made on our behalf are subject to confirmation by us in every respect.

3. We shall retain ownership and copyright of diagrams, drawings, calculations and other documents; they may not be made available to third parties. This applies especially to those written documents which are labelled „confidential". The customer shall require our written agreement before passing them to third parties.

§ 3 Confirmation

1. Orders shall only be regarded as binding by us once they have been confirmed in writing or electronically.

2. For our part, contestibility due to error shall still be deemed to be timely when there has been an appropriate period of time since the discovery of the reason for contestation and not immediately following such discovery.

§ 4 Prices

1. Unless stated otherwise in the order confirmation, our prices shall apply „ex works" exclusive of packaging for transport; the latter shall be invoiced separately.

2. HOPPE reserves the right to adjust prices even after conclusion of contract, if cost increases caused by raw material prices or union agreements cannot be absorbed.

3. Statutory value added tax is not included in our prices; it will be shown separately in the invoice at the statutory rate applicable on the date of invoicing.

§ 5 Dispatch

1. If the goods are dispatched to the customer at his request, the customer shall assume the risk of accidental loss or deterioration of the goods at the latest at the time the goods leave the works/warehouse. If the goods are ready for dispatch and the dispatch or acceptance are delayed for reasons for which the purchaser is responsible, then the risk shall be assumed by the purchaser from the date of receipt of notice that the goods are ready for dispatch.

2. The purchaser shall bear the transport costs; packaging is invoiced at cost price and is nonreturnable.

§ 6 Payment

1. In line with market customs. Other methods of payment shall require the written form. No discount on new invoices shall be allowed if older invoices have not yet been paid in full.

2. If counterclaims are not established by way of a final judgment of a court of competent jurisdiction or are not accepted by us, the customer may neither set off nor assert the right to withhold payment with regard to these claims. Moreover, he may exercise his right to withhold payment only if his counterclaim rests on the same contractual relationship.

3. If payment is delayed, interest payable on arrears shall be invoiced at the appropriate bank rates of interest. All payments shall be made exclusively to us. Bills of exchange shall be accepted only on account of performance without guarantee for protest and only subject to our prior consent and further provided that they are eligible for discount. Discounting charges shall be calculated from the due date of the amount invoiced. All our claims - including those for which we have accepted bills of exchange in payment - shall fall due immediately, if the terms of payment are not adhered to or if, upon conclusion of the contract, we become aware of clear indications of the purchaser's diminished credit-worthiness. Moreover, in such a case, we shall be entitled to refuse further performance due on our part until payment has been effected or security has been provided for it. We may also prohibit the resale of the goods delivered under reservation of ownership and
may demand their return.

§ 7 Delivery period, act of God, industrial action

1. Agreed or informed delivery times shall be adhered to as far as possible, but are not binding.

2. If the supplier is hindered in fulfilling his obligations by the emergence of unforeseen circumstances, which, notwithstanding his reasonable care as required by the circumstances of the case, he could not prevent, e.g. breakdown, delay in the supply of essential raw materials and building materials, the delivery period shall be extended to an appropriate extent provided that it is still possible to perform the delivery or the service. The same shall apply if we ourselves are affected by such events. If the delivery or the service is not possible because of the above-mentioned circumstances, we shall be released from the obligation to deliver. The same shall apply in the event of a strike or lockout. If the delivery period is extended in these 3 cases or if the supplier is

released from the obligation to deliver, any claims for damages that the purchaser may base thereon shall cease. If the above-mentioned circumstances affect the purchaser, the same legal consequences shall also apply to his obligation to purchase.

3. It shall be the duty of the contract partner affected by the hindrances as mentioned in the previous paragraph to inform the other contract partner forthwith. No legal action resulting in possible benefit shall be entered into if this is not done.

§ 8 Notification of defects, liability in particular with respect to defects and returned goods.

1. Our liability for defects assumes that the orderer has complied properly with the conditions of sale pertaining to requirement to examine and notify defect. It shall be the duty of the orderer to notify us in writing of any defects within a period of five days following receipt in the case of recognisable defects and immediately upon discovery in the case of unrecognisable mistakes.

2. In cases of justified complaint, we maintain the right to decide to rectify the defect or provide alternative goods. Claims on behalf of the orderer in respect of required expenses pertaining to the making good of the complaint, especially transport-, means-, work- and material-costs, are excluded, in so far as the expenses increase as a result of the subsequent delivery of an item to a location other than that of the place of business of the orderer, unless (such delivery) complies with use in accordance with the requirements.

The orderer shall be required to set out an appropriate timetable with right of rejection before further rights are called into force.This shall be invalid if we have previously expressly rejected making good. Should the matter to be delivered be only in kind, then any of claims for compensation whatsoever, independent of guilt, shall be ruled out. Furthermore, we shall only be responsible for such claims where cases of gross negligence or intention are proven.

This limitation is not valid in cases of damage in relation to injury to life, body or health, caused through gross negligent breach of duty on our part or a deliberate or negligent breach of duty on the part of a legal representative or accessory. Neither shall it be valid in cases where any other damage is caused through gross negligent breach of duty on our part, or a deliberate or gross negligent breach of duty on the part of a legal representative or accessory.

3. The validation of claims resulting from quality or durability guarantees shall have force only if such a guarantee has been issued expressly by us in writing. In the case of claims under the guarantee, it is the duty of the orderer to provide us with appropriate items from the consignment immediately so that examination can be made.

4. Any claim in respect of defects shall expire two years after delivery. Limitation shall be extended by means of a written explanation by the orderer making a claim to such time as making good on our part be refused in writing, whereby access to the written explanation by the other contact partner shall be of prime importance.

5. In the case of obligation to pay damages as a result of a breach of contractual duty on our part, the claim shall be restricted to the cover of the costs of the product liability insurance.This restriction shall not apply in the case of damages in relation to life, body or health, which arise out of negligent breach of duty on our part or out of an intentional or negligent breach of duty on the part of a legal representative or accessory. Neither shall it apply in the case of any other damage caused through gross negligence on our part or through deliberate or gross negligent breach of duty on the part of a legal representative or accessory.

6. In so far as our liability is excluded or limited, this shall also apply to the personal liability of our employees and other accessories.

7. Prior written consent is needed before goods can be returned from the customer. Should the goods be returned justifiably on account of defect in the goods supplied, then the customer may insist on agreement, if the said customer has a special interest in returning the goods.

§ 9 Deliveries

1. Quantities ordered will be delivered in packaged units. It shall be deemed to be agreed that we shall be permitted to make under- and over-deliveries of up to 10% on customer-specific products, subject to manufacturing.

2. Partial deliveries for which invoices are issued shall be considered as separate contracts.

§ 10 Reservation of Title

1. We reserve title to the goods until all payments due under the contract and these General Terms and Conditions of Sale have been made. In the event of behaviour on the part of the customer contrary to the terms of the contract, especially delay in payment, we shall be entitled to take the goods back. Our retrieval of the goods shall not constitute a termination of the contract unless we have expressly stated the same in writing. Seizure of the goods on our part however always constitutes termination of the contract. After retrieving the goods, we shall be entitled to use the same, the proceeds from such utilisation being taken into account against the liabilities of the customer after deduction of appropriate costs.

2. The customer shall be obliged to treat the goods with care. In particular he shall be obliged to sufficiently insure them at his own expense against fire, water damage and theft at their replacement value.

3. In the event of seizure or other interventions by third parties the customer shall inform us in writing without delay, so that we may take legal action. If the third party is not in a position to reimburse us for the legal and out of court costs of an action the customer shall be liable for the loss arising.

4. Any processing or conversion of the goods by the customer shall always be undertaken on our behalf. Where the goods are processed with other objects not belonging to us we shall thereby acquire co-ownership of the new object in the ratio of the value of the goods to the other processed objects at the time of processing. Moreover, the same conditions shall apply to the object created by processing as apply to the goods delivered under reservation of title.

5. Where the goods are mixed with objects not belonging to us we shall acquire co-ownership of the new objects in the ratio of the value of the goods to the other objects at the time of mixing. If the mixing occurs in such a way that the customer's object must be regarded as the main object it shall be deemed as to us proportionately. The customer shall hold in safe-keeping for us such goods in sole ownership or co-ownership.

6.As security for our claims against the customer the latter shall assign to us any claims against a third party which may arise from the connection of the goods with a property.

7. We undertake to release at the request of the customer securities to which we are entitled, insofar as the value of our securities exceeds the claims to be secured by more than 20%; the choice of securities to be released shall rest with us.

§ 11 Cost of tools

1. As a matter of principle the costs for tools shall be charged only in part and separately from the value of the goods. By paying part of the cost of the tools the customer shall not acquire any claim to the tools; the tools shall remain the property of the manufacturer and remain in his possession. The manufacturer undertakes to retain the tools for the customer for one year after the last delivery. If, before expiry of this period, the customer notifies that orders will be placed within a further year the period of safe-keeping will be extended for a further year. After this period and with no further orders being placed the manufacturer may freely dispose of the tools.

2. Costs for tools arising from orders which fail to come to fruition: For orders that are cancelled in the development stage (due to difficulties of design or conversion) or in the run-up period, we reserve the right to invoice the costs incurred.In this context, for release of the samples the costs incurred for the initial tools shall be invoiced. If cancellation occurs after the release of samples, the costs incurred for the entire extent of the standard tools, special equipment and gauges, depending on the anticipated monthly requirement, shall be invoiced.

3. If tools which are in the process of being produced are invoiced, they shall remain available for inspection for four weeks and shall be scrapped at the end of this period. In order to protect the processes applied, completed plans for work phases and construction drawings of the tools shall not be subject to inspection.

§ 12 Period of acceptance

1. Where the purchaser is obliged to request delivery or collect the goods ordered within a certain period, we shall have the option, after expiry of that period, to terminate the contract or to issue an invoice.

§ 13 Destination, place of jurisdiction, applicable law

1. Place of performance for all obligations arising from the contractual relationship shall be the head office of the Supplier.

2. Place of jurisdiction: place of jurisdiction for any dispute arising from the contractual relationship shall be CH-7000 Chur/GR.

3. Swiss law shall apply excluding the provisions of the Vienna Convention on the Sale of Goods.

4. In the event of any dispute arising out of the interpretation of these general terms and conditions, the German language version shall be regarded as binding. Should any one of the provisions of this Agreement be or become legally invalid the validity of the remaining provisions hereof shall not be affected thereby. The Partners undertake instead to replace the invalid provision by another provision which shall to the greatest extent possible correspond to the spirit and the economic effect of the invalid provision. By analogy, the Partners shall correct any provisions hereof which are unclear or may be construed or interpreted in different ways, or add any provisions which may have been omitted, which correction and addition of provisions the Partners undertake to execute amicably and by mutual agreement, maintaining the spirit of the entire set of Agreements.

Product liability of door and window hardware (eg door handle sets and window handles)

1. Product information and application according to instruction
2. Misuse (inappropriate use or use contrary to instruction)
3. Product performance
4. Product care
5. Duty to inform and instruct
6. Application of related hardware
7. Resista® – The HOPPE surface guarantee
8. HOPPE function guarantee for door and window hardware

As a result of a new product liability law, the manufacturer is to define products as to their performance (duty to instruct and inform).

HOPPE is thereby providing the following information.

1. Product information and application according to instruction

HOPPE hardware fittings are manually-operated appliances by means of which doors, French doors and windows in domestic and non-domestic buildings can be opened or closed and/or locked.

They are normally used in conjunction with supplementary hardware such as locks, cylinders or tilt/turn hardware.

Special provisions of law have to be observed in the case of fire doors and the direction of escape for example, in cases where a fixed fitting (knob,handle) is used.

It is imperative that only the parts supplied for fixing are used and also that fixing instructions are strictly adhered to.

This applies to all means of fixing
a) supplied by HOPPE
b) supplied by other manufacturers as integral parts of their hardware (eg. screws supplied by the manufacturer of tilt/turn hardware for windows).

Products which are installed in aggressive, corrosion-inducing areas are special fittings. They should only be used (applied) following consultation with HOPPE.

2. Misuse (inappropriate use or use contrary to instruction)

Misuse of fittings for doors and windows, ie using the product contrary to instruction, may occur in particular when

- tools, such as pliers or tubular adaptors are used,
- additional loads (blocking loads or support loads) have an impact, for example when an object is placed under the handle to block the door,
- when force over and above normal manual use is applied to the handle, for example when attempting to force a tilt/turn fitting beyond its normal rest position or when children, for example, use door handles as something to hold on to.

- foreign objects or objects contrary to instruction, such as spindles manufactured by other companies are used or when such products are used alongside HOPPE products,
- tampering has occurred which interferes with the function of the product, for example in attempting to break in or out with tools in the case of lockable window handles,
- sharp objects are used to damage the surface,
- foreign objects and/or objects contrary to instruction are introduced into the hardware or strike-plate so as to prevent normal use,
- tampering with the hardware or strike-plate has occurred resulting in damage to the construction or adversely affecting function or effectiveness.

3. Product performance

The DIN 18255, DIN 18257 and DIN 18273 standards for door hardware and the RAL-GZ 607/9 standard for window hardware are definitive (in a pioneering sense).

The content of these standards applies in the same way to other fittings too.

In the case of window handles, the regulations of appropriate institutes, such as the Institute for Window Technology in Rosenheim apply in addition to those of RAL.

No other conditions may be added without prior approval by HOPPE.

The durability of a product is especially dependent on the frequency of
- use
- type of use
- location and care.

Replacement of the fitting shall occur only when, despite proper maintenance and care, it no longer functions or when the surface maycause injury.

4. Product care

It is essential that the fitting and fixing-means are fitted correctly!

All movable parts are to be correctly maintained at least once a year.

This is particularly so in the case of door handle - spindle connections as well as in locking cylinders for lockable window handles. It is essential that no resinous lubricants (graphite is appropriate) are used in the locking cylinders.

Dependent on the amount of use, fittings should be treated by agents recommended by HOPPE .
Basically no strong acids or alkalis should be used. Contact with mortar and similar substances should also be avoided. Only cleaning agents which do not contain corrosion-inducing substances should be used.

5. Duty to inform and instruct

The following information material is available to the trade, planners/ architects, advisory institutions, installers, builders and users:
- catalogues and brochures,
- offer documentation
- DIN standards: 18255, 18257, 18273 as well as related standards (published by Beuth GmbH, 10785 Berlin) along with instructions for fixing, use and care.

Where necessary HOPPE is also able to advise.

When choosing HOPPE fittings as well as for their fixing, use and care,

- architects, planners and advising institutions are expected to request all the necessary product information from HOPPE and to adhere to it,
- architechtural hardware distributors are expected to observe the product information in the documention and in particular request all the necessary mounting instructions and pass them on to the installers,
- installers are expected to observe all product information, especially HOPPE's instructions relating to use and care and to pass them on to the contractors and users.

6. Application of related hardware

All possible variations within the individual fittings, as well as accessories, are expected to be used appropriately with regard to their particular qualities according to the requirements of product liability as listed above.

1. Resista® – The HOPPE surface guarantee

Guarantee:
As manufacturer, we guarantee, under the conditions set forth below, the durability of properly-used HOPPE hardware, over and above the seller's legal liability for material defects. The Resista® surface guarantee includes all defects which can be proved to have been caused through fault in manufacturing or material, for example when the surface is tarnished or discoloured (appearance of spots) or the protective surface has become separated from its base material, and not through improper use.

Guarantee Exclusions:
All interchangeable parts, such as screws, connecting spindles and springs etc, are excluded from this guarantee. Furthermore, no liability will be assumed for any damage caused through:

- unsuitable or improper use
- incorrect or negligent treatment
- disregard for instructions for fitting or care
- alterations or repair by the enduser or a third party
- chemical or physical agents, where the surface has been improperly treated, for example by sharp-edged instruments.

Guarantee Conditions:
This guarantee relates, within the guarantee period, solely to either replacing the handle free of charge or to repairing same free of charge, on behalf of the original enduser, this decision being at HOPPE's discretion. Costs and expenses, postage and packaging and similar, as incurred by the complainant, shall not be reimbursed. Claim to guarantee shall only occur on presentation of the product itself and the receipt and shall not exceed the original purchase price.

Guarantee period:
The guarantee period shall be for 10 years and shall begin on the day of purchase by the original enduser. In the event of any claim, complainants should address themselves directly to the seller or manufacturer presenting both the product and the receipt.

HOPPE Holding AG · Via Friedrich Hoppe · 7537 Müstair



2. HOPPE operational guarantee for door and window hardware

Guarantee:
As manufacturer, we guarantee, under the conditions set forth below, the durability of properly-used HOPPE hardware, over and above the seller‘s legal liability for material defects. The guarantee applies to the function of HOPPE door and window hardware and includes all defects which can be proved to have been caused through fault in manufacturing or material.

The operational guarantee includes the following features:

- transfer of the rotary motion to the door lock or the window turn-/tilthard ware
- locking mechanism (in the case of window handles with special functions: lockable, push-to-open, Secustik®)

Guarantee Exclusions:
All interchangeable parts, such as screws, connecting spindles etc, are excluded from this guarantee. Furthermore, no liability will be assumed for any damage caused through:

- unsuitable and improper use,
- incorrect or negligent treatment,
- the disregard of instructions for fitting or care, alterations and repair by the enduser or a third party,
- chemical or physical agents, where the surface has been improperly treated, for example by sharp-edged instruments,
- elements (door, window) and/or hardware parts (e.g. locks, hinges etc.) which do not work perfectly.

Guarantee Conditions:
This guarantee relates, within the guarantee period, solely to either replacing the handle free of charge or to repairing same free of charge, on behalf of the original enduser, this decision being at HOPPE‘s discretion. Costs and expenses, postage and packaging and similar, as incurred by the complainant, shall not be reimbursed. Claim to guarantee shall only occur on presentation of the product itself and the receipt and shall not exceed the original purchase price.

Guarantee period:
The guarantee period shall be for 10 years and shall begin on the day of purchase by the original enduser. In the event of any claim, complainants should address themselves directly to the seller or manufacturer presentingboth the product and the receipt.

HOPPE Holding AG · Via Friedrich Hoppe · 7537 Müstair

(as per 09/2005)

Conditions for the use of HOPPE pictures/technical drawings

HOPPE Holding AG, CH-7537 Müstair, hereinafter referred to as HOPPE, in the interests of cooperation with its partners in the promotion of goods supplied by HOPPE, makes available the enclosed pictures and technical drawings without charge. Both illustrated products and pictures/technical drawings are protected by copyright to which HOPPE has unrestricted entitlement. This is equally valid for HOPPE's brand rights used in connection with the pictures and technical drawings.
HOPPE allows the use of its pictures/technical drawings in print media, e.g. in catalogues and similar sales documentation, for users' distribution to customers. HOPPE is, however, to be informed in advance of the use of such pictures/technical drawings in advertisements and on the internet.

The user is to inform the printers/service providers involved that the pictures/technical drawings are protected by copyright. The user shall not been titled to alter the pictures/technical drawings as made available by HOPPE in any way whatsoever, e.g. in using pertinent picture-editing programmes, though he may take measures to alter the size of the image for printing purposes.

The user is to undertake all the necessary precautions to protect the pictures/technical drawings made available by HOPPE from misuse by a third party and is to inform HOPPE without delay in the event of any such misuse being discovered.

Two copies of the printed matter showing use of the said pictures/technical drawings are to be sent to HOPPE. In using such pictures/technical drawings, the user automatically consents to the conditions of use. Swiss law shall apply. Place of jurisdiction to be CH-7000 Chur/GR, Switzerland.

Müstair, January 2006

Examples



File name:
1138-42K+KV-42KS+KVS-PZ-F1

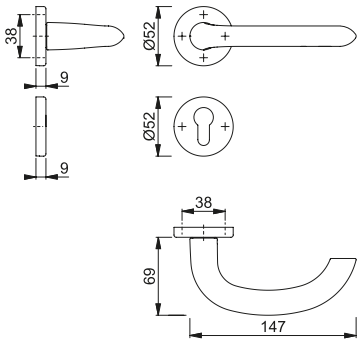

File name:
1138-42K-42KS-PZ

File formats

You can get picture and drawing data from HOPPE in the following standard formats:

	Pictures		Catalogue drawing		
Type of format	Pixel*	Pixel*	Pixel*	Vector**	
File format	jpg	tif	tif	eps	dwg
Compression	9 / standard	LZW	LZW	none	none
Mode	RGB	CMYK	Bitmap	-	-
Resolution	300 dpi	300 dpi	750 dpi	independent	independent

Other file formats available on request.
*Pixel files can only be enlarged to 20-25% of the original size.
**Vector files can be enlarged as required without loss of quality.

(as per 05/2010)

Index – in numerical ascending order by article-number

Article no.	Page
508679	142
515066	298
515073	298
517053	181
517060	181
517077	181
517565	297
517572	297
517589	297
517596	297
518074	156
518524	297
518531	297
518555	297
519071	296
519095	296
519118	296
519163	296
519170	296
519187	296
519200	297
523016	120
530021	290
545971	124
553648	273
556090	277
556106	277
556144	273
564187	308
564712	121
564729	121
572717	236
572724	236
573585	295
575121	236
575138	236
588282	279
591732	235
592494	294
595297	277
598212	278
600168	294
602001	122
602018	122
602551	273
602575	277
602599	273
602605	277
604531	287
605200	288
605217	288
605224	289
605231	289
605248	289
605255	289
605262	289
605279	289
605422	294
605439	294
605477	271
605484	271
606269	272
606511	287
609253	270
610563	277
610617	279
621248	234
621255	234
623075	234
623082	234
625826	122
625895	124
626045	122
626052	122
646098	309
646753	294
649808	294
650842	231
653379	122
655908	270
655946	272
655953	272
658053	232
658060	232
658077	232
658084	232
658091	232
658107	232
658114	232
658121	232
658138	232
658145	231
658152	236
658176	233
658183	233
658190	233
658206	233
658220	233
658282	232
658299	232
658305	232
658312	232
658657	236
658664	236
658671	231
658688	231
658695	231
658701	231
672578	297
678013	271
691661	156
693078	297
693900	271
698554	290
762712	120, 142
762750	120, 142
762804	120, 142
763009	295
763870	294
766260	235
771967	297
777402	309
780952	235
781270	228
781485	235
781690	228
781829	228
782116	228
782277	226
782796	235
782802	228
783458	231
783656	231
783748	228
785506	226
785711	231
786855	229
786916	228
787203	229
788576	226
790487	229
798452	226
798483	226
807215	272
812745	290
812752	290
812769	290
812783	290
814206	157
814299	158
814787	156
814817	156
814961	157
814978	157
815074	157
817979	159
818761	159
820221	287
820238	288
820412	286
820429	286
820504	286
820511	286
820641	295
820849	298
822003	236
823246	298
823277	298
828074	231
829316	295
832965	273
1652641	290
1683894	297
1693048	273
1694104	232
1704608	120
1707462	232
1720886	231
1750719	232
1751033	177
1751084	177
1751105	177
1751201	178
1751210	178
1775650	307
1775668	307
1775730	310
1775810	309
1775844	308
1775879	308
1776601	121
1791908	262
1791916	263
1841717	296
1841733	296
1843860	281
1885015	281
1885306	120
1885331	120
1885939	178
1885963	178
1886288	281
1894384	262
1894499	262
1894675	263
1894712	263
1901530	313
1901556	313
1904116	160
1904175	160
1904183	160
1917347	229
1997720	177
1998263	177
1998271	177
2010595	274
2010624	274
2010632	274
2010659	274
2010974	274
2010982	274
2011029	274
2011037	274
2011053	275
2011061	275
2011555	275
2011571	275
2011598	275
2011643	275
2011678	275
2011707	275
2039101	176
2039620	176
2039945	175
2040250	175
2040276	176
2040321	176
2047671	158
2059049	176
2059065	176
2072876	68
2072884	68
2079074	306
2099649	233
2119241	307
2122749	158
2122757	158
2124357	158
2124816	161
2124824	161
2125000	158
2125536	158
2125544	158
2125579	158
2125587	158
2149116	296
2159120	160
2160981	305
2195606	231
2206301	276
2206344	276
2206387	276
2206766	276
2206782	276
2206811	278
2206838	278
2206862	280
2206871	280
2212816	230
2212824	230
2215890	236
2215902	236
2229765	161
2246127	142
2246186	120
2248051	175
2266451	175
2285396	232
2292473	280
2301886	265
2301894	265
2301907	265
2301915	265
2325845	177
2325853	177
2345942	270
2345951	270
2346179	271
2346195	271
2404842	160
2450929	202
2450937	202
2450945	202
2450953	202
2450961	194
2450970	194
2450988	194
2450996	194
2451905	202
2451921	202
2451930	202
2451948	202
2451956	194
2451972	194
2451981	194
2451999	194
2453046	231
2475907	218
2475940	218
2475958	218
2475974	218
2475991	218
2476061	218
2478614	232
2480415	202
2480431	202
2480440	202
2480458	202
2480466	194
2480482	194
2480491	194
2480511	194
2491106	232
2492416	211
2492483	211
2492491	211
2492512	211
2492521	211
2492547	211
2492555	211
2492571	211
2493451	264
2530321	309
2537119	212
2537151	212
2537160	212
2537194	212
2537207	212
2537240	212
2537258	212
2537274	212
2537282	212
2537291	212
2537338	213
2537362	213
2537389	213
2537397	213
2537400	213
2537418	213
2539077	166
2539229	166
2540449	166
2540481	166
2540650	166
2540705	166
2546664	166
2546672	166
2546681	166
2546699	166
2546701	166
2546710	166
2546744	166
2546761	166
2546947	220
2546971	220
2546980	220
2547000	220
2547018	220
2547042	220
2547051	220
2547077	220
2547085	220
2547106	220
2547114	220
2547131	220
2547149	220
2547165	220
2547173	220
2547190	220
2547202	220
2547211	220
2547229	220
2547237	220
2547245	221
2547261	221
2547270	221
2547288	221
2547296	221
2547309	221
2550882	273
2550891	273
2570912	210
2571042	210
2571051	210
2571069	210
2571077	210
2571085	210
2571093	210
2571114	210
2571341	226
2571368	226
2571392	226
2571430	226
2571448	226
2571456	226
2571464	226
2571472	226
2571499	226
2571501	226
2571940	224
2571958	224
2571966	224
2571974	224
2572002	224
2572011	224
2572029	224
2572037	224
2572045	224
2572053	224
2572061	224
2572070	224
2572088	224
2572096	224
2572109	224
2572117	224
2572192	224
2572205	224
2572213	224
2572221	224
2572248	216
2572256	216
2572264	216
2572281	216
2572336	216
2572344	216
2572352	216
2572361	216
2572379	216
2572387	216
2572395	216
2572408	216
2572416	216
2572424	216
2572432	216
2572459	216
2572521	216
2572539	216
2572547	216
2572555	216
2572563	222
2572571	222
2572580	222
2572598	222
2572601	222
2572619	222
2572660	222
2572678	222
2572686	222
2572694	222
2572707	222
2572715	222
2572723	222
2572731	222
2572740	222
2572758	222
2572766	222
2572774	222
2572782	222
2572791	222
2572803	222
2572811	222
2572820	222
2572838	222
2572934	222
2572942	222
2572951	222
2572969	222
2572977	222
2572985	222
2573005	218
2573013	218
2573021	218
2573030	218
2573179	218
2573187	218
2573195	218
2573208	218
2573216	218
2573224	218
2573232	218
2573241	218
2573259	218
2573267	218
2573275	218
2573283	218
2573291	218
2573304	218
2573312	218
2573321	218
2573460	218
2573478	218
2573486	218
2573494	218
2573507	227

Article no.	Page
2573515	227
2573523	227
2573540	227
2573558	227
2573566	227
2573611	227
2573620	227
2573638	227
2573646	227
2573654	227
2573662	227
2573671	227
2573689	227
2573697	227
2573700	227
2573718	227
2573726	227
2573734	227
2573742	227
2573751	227
2573769	227
2573777	227
2573785	227
2573970	225
2573988	225
2573996	225
2574008	225
2574024	225
2574032	225
2574041	217
2574059	217
2574067	217
2574075	217
2574083	217
2574091	217
2574104	223
2574112	223
2574121	223
2574139	223
2574147	223
2574155	223
2574201	219
2574219	219
2574243	219
2574260	219
2574278	219
2574294	219
2574358	228
2574374	228
2574391	228
2574411	228
2574438	228
2574471	228
2574534	229
2574542	229
2574702	236
2574711	236
2574745	236
2574796	236
2574833	236
2574841	236
2574905	234
2574913	234
2574921	235
2574948	235
2574956	235
2574964	235
2574972	235
2574981	235
2575027	231
2575051	231
2575078	231
2575094	231
2575115	231
2575123	231
2575140	231
2575254	232
2575318	232
2575334	232
2575351	232
2575369	232
2575377	232
2575385	232
2575393	232
2575406	232
2575422	232
2575457	232
2575473	232
2575502	232
2611059	279
2619317	233
2619325	233
2623471	166
2623498	166
2653435	304
2653443	304
2653451	305
2664062	268
2664071	268
2664089	268
2664097	268
2664100	268
2664118	268
2664126	268
2664134	268
2664142	268
2664151	268
2667108	268
2667116	268
2694202	219
2694211	217
2694229	221
2694245	223
2694253	225
2694851	279
2694860	279
2694878	279
2723712	304
2723747	306
2723755	306
2723763	306
2723771	306
2723780	306
2723798	306
2723801	306
2725726	229
2727511	57
2727529	57
2727537	57
2727545	57
2760249	310
2794481	307
2810728	147
2813128	106
2813291	106
2820820	22
2820838	22
2820969	27
2820993	27
2821021	27
2821435	71
2821443	71
2821478	71
2821591	71
2821611	71
2821654	71
2821662	71
2821700	71
2821718	71
2821734	71
2821822	34
2821849	34
2821857	34
2821890	34
2821929	34
2821937	34
2822180	80
2822198	80
2822201	80
2822227	80
2822235	80
2822251	80
2822260	80
2822286	80
2822294	80
2822307	80
2822315	80
2822331	80
2822374	80
2822391	80
2822403	80
2822411	80
2822446	80
2822454	80
2823051	22
2823511	38
2823529	38
2823959	147
2823967	147
2823975	147
2823991	147
2824011	147
2824038	147
2824046	147
2824054	147
2824492	72
2824513	34
2825209	30
2825217	30
2825313	30
2825461	27
2825495	34
2825508	80
2825516	80
2825524	80
2825532	80
2825541	80
2825559	80
2825567	81
2825575	81
2825591	81
2825604	81
2825612	81
2825621	81
2825639	81
2825663	81
2825671	81
2825680	43
2825698	43
2825701	43
2825727	43
2825743	43
2825751	43
2825778	30
2825786	43
2825794	43
2825807	43
2825815	43
2825823	43
2825831	43
2825840	43
2825858	52
2825866	43
2825874	43
2825882	43
2825891	52
2825903	52
2825971	48
2825989	30
2825997	48
2826009	52
2826025	48
2826033	52
2826041	52
2826068	138
2826076	52
2826084	138
2826105	52
2826113	138
2826130	145
2826148	145
2826156	30
2826172	145
2826199	30
2826391	30
2827511	58
2827520	58
2827538	58
2827546	58
2827554	58
2827562	58
2827571	58
2827589	58
2828717	146
2828725	146
2828741	146
2828768	146
2828784	146
2828792	146
2829349	151
2829357	151
2829365	151
2829381	151
2829402	151
2829411	151
2829429	151
2829437	151
2829445	151
2829453	151
2829461	151
2829470	151
2829488	151
2829496	151
2829509	151
2829517	151
2829533	151
2829541	151
2829912	262
2829921	263
2829947	147
2829963	147
2829971	147
2830016	151
2830024	151
2830041	151
2830059	151
2830075	151
2830083	151
2830260	72
2830585	126
2830622	126
2830649	126
2830673	126
2830729	126
2830745	126
2831271	147
2831297	147
2831300	147
2831326	147
2831334	147
2831351	147
2832054	72
2832071	72
2832089	72
2832100	72
2832118	72
2832126	72
2832169	72
2832177	72
2832185	72
2832193	72
2832206	72
2832222	72
2832231	72
2833604	38
2837066	204
2837074	204
2837091	204
2837103	204
2837111	204
2837138	204
2837146	204
2837154	204
2838798	204
2838801	204
2838819	204
2838827	204
2839061	130
2839070	130
2839109	130
2839117	130
2839133	130
2839141	130
2839176	130
2839248	130
2839432	108
2839459	108
2839483	108
2839504	108
2839547	108
2839555	178
2839563	178
2839694	108
2839707	108
2839715	108
2839969	150
2839977	300
2839985	150
2839993	299
2840011	150
2840151	150
2840249	150
2840302	150
2840329	178
2840345	150
2840353	178
2840361	150
2840370	177
2840388	177
2840396	177
2844784	269
2844805	269
2844813	269
2844821	269
2844830	269
2844848	269
2851571	27
2851597	27
2854000	42
2854026	42
2858781	27
2876751	144
2876794	136
2910868	70
2919432	144
2919539	136
2919547	136
2919854	136
2931001	200
2931010	200
2931036	200
2931044	200
2931052	200
2931061	200
2931079	200
2931095	200
2931221	200
2931247	200
2931255	200
2931263	200
2931360	200
2931394	200
2931407	200
2931431	200
2947484	108
2947572	108
2947599	108
2954473	70
2971548	18
2971556	18
2971564	18
2971572	18
2971581	18
2971599	18
2971601	18
2971610	18
2971628	18
2971636	18
2971644	18
2971652	18
2971661	18
2971679	18
2971687	18
2971695	18
3043858	262
3047728	68
3054611	22
3054629	22
3054645	22
3054696	262
3054709	263
3054717	263
3054725	210
3054733	210
3054741	210
3054750	210
3054768	210
3054776	210
3054784	210
3054792	210
3054813	27
3054821	27
3054830	27
3054848	27
3054899	34
3054901	34
3054910	34
3054928	34
3054952	34
3054961	34
3054979	34
3054987	34
3055613	181
3055621	161
3055630	161
3055648	161
3055656	161
3057011	288
3058048	109
3058161	109
3058216	109
3058304	131
3058312	131
3058321	131
3070979	226
3112542	136
3126207	264
3137782	26
3137803	26
3137820	26
3137846	26
3137854	26
3137889	26
3165345	160
3189494	111
3189734	133
3189769	140
3189793	49
3189881	19, 39, 49
3189929	19, 39, 49
3189953	19, 39, 49
3189988	66, 88, 90
3189988	94, 97, 104
3189988	133, 140
3189996	66, 88, 90
3189996	94, 97, 104
3189996	133, 140
3190006	66, 88, 90
3190006	94, 97, 104
3190006	133, 140
3190022	45, 74, 83
3190022	111, 153
3190031	45, 74, 83
3190031	111, 153
3190049	45, 74, 83
3190049	111, 153
3201182	153
3201191	74
3201203	83
3201211	19
3201238	45
3201254	39
3202601	70
3202610	70
3203330	70
3203348	70
3206522	246
3206549	246
3206557	246
3206573	246
3206581	246
3206590	246
3206602	246
3207138	242

Index – in numerical ascending order by article-number

Article no.	Page
3207146	242
3207154	242
3207162	242
3207251	247
3207269	247
3207277	247
3207285	247
3207293	247
3207306	247
3207314	247
3207736	243
3207744	243
3207752	243
3207761	243
3242996	172
3243067	172
3243104	172
3246305	172
3246330	172
3257338	116
3257346	116
3257354	116
3257362	116
3257371	116
3257389	116
3257397	116
3257400	116
3257426	116
3257434	116
3257442	116
3257451	116
3257469	116
3257477	116
3257485	116
3257493	116
3257506	116
3257522	116
3257531	116
3257549	116
3257557	116
3257565	116
3257573	116
3257581	116
3272909	114
3272917	114
3272925	114
3272933	114
3272941	114
3272968	114
3272976	114
3272984	114
3276715	114
3276740	114
3276900	64
3276942	64
3276951	64
3277030	64
3277048	64
3277072	64
3277081	64
3277099	64
3277101	64
3277339	114
3277347	114
3278690	65
3278788	76
3278921	123
3278999	121
3279019	121
3279035	121
3281303	117
3289410	76
3289524	65
3289541	65
3289655	65
3289911	122
3289938	76
3289954	76
3290154	123
3290162	123
3290171	123
3292061	115
3292096	115
3292109	115
3292133	115
3292141	115
3292150	115
3292230	115
3292248	115
3292256	115
3301141	128
3358534	128
3371245	117
3374497	66
3391174	269
3391191	269
3391203	269
3391211	269
3409611	128
3420140	310
3429144	90
3429152	97
3481428	168
3481479	168
3525785	305
3532192	297
3588583	88
3589308	94
3652231	86
3652266	86
3652506	86
3652629	86
3652661	86
3653234	86
3676971	87
3676997	87
3677113	87
3679451	170
3679477	170
3703051	87
3734181	104
3738019	179
3738027	179
3738035	179
3738078	179
3738086	179
3738094	179
3738107	179
3738115	179
3738123	179
3759581	299
3772751	306
3775899	308
3794070	172
3794125	172
3794133	172
3794141	172
3795582	170
3795591	170
3795603	170
3795611	170
3795620	170
3795638	170
3795648	170
3796753	169
3796761	169
3796770	169
3796788	169
3796796	169
3796809	169
3798231	172
3798257	172
3798505	172
3798521	172
3798556	172
3798564	172
3799102	174
3799111	174
3799137	174
3799153	174
3799161	174
3799170	174
3799575	174
3799583	174
3799591	174
3800089	174
3800097	174
3800118	174
3800126	174
3800134	174
3800142	174
3800169	174
3800177	174
3800185	174
3800636	172
3800644	172
3800652	173
3800679	173
3800695	173
3800708	173
3800724	173
3800767	173
3800775	173
3800791	173
3800804	173
3800855	173
3800880	173
3800898	173
3801196	172
3801217	172
3801233	172
3801250	172
3801372	173
3801401	173
3802261	168
3802527	168
3803298	173
3817462	167
3817518	167
3825024	299
3836831	168
3836840	168
3842810	110
3842844	132
3842852	139
3848082	168
3848111	168
3848154	168
3848162	168
3854255	44
3854263	73
3854271	44
3854280	44
3854298	152
3882344	165
3882352	165
3882361	171
3882379	171
3882395	165
3882416	180
3882459	171
3883697	165
3883726	171
3883945	180
3883953	180
3885140	180
3887209	164
3887217	164
3887428	164
3911070	190
3911109	190
3911117	190
3911133	190
3911141	190
3911150	190
3947208	246
3947216	246
3947224	246
3947232	246
3947241	246
3947540	247
3947558	247
3947566	247
3947574	247
3947582	247
3947831	251
3947849	251
3947857	251
3947865	251
3947873	251
3947890	251
3947902	251
3947911	251
3947929	251
3947937	251
3947953	250
3947970	250
3947988	250
3947996	250
3948008	250
3948024	250
3948032	250
3948041	250
3948059	250
3948067	250
3948075	253
3948083	253
3948091	253
3948104	253
3948112	253
3948121	253
3948139	253
3948147	253
3948155	253
3948163	253
3948180	252
3948198	252
3948201	252
3948219	252
3948227	252
3948235	252
3948251	252
3948260	252
3948278	252
3948286	252
3948307	255
3948315	255
3948323	255
3948331	255
3948340	255
3948374	255
3948382	255
3948391	255
3948403	255
3948411	255
3948420	254
3948438	254
3948446	254
3948454	254
3948462	254
3948489	254
3948497	254
3948500	254
3948526	254
3948534	254
3993159	190
6520605	274
6804538	278
6808521	295
6808562	295
6961239	298
8053597	298
8124414	275

Index – in numerical ascending order by design-number

HOPPE®
Handle of excellence.

Design no.	Page
0124/U35	169
0138/US956	108
0140/US956	130
038/US956	121
0400/US956	64
0510/U26	144
0515/US956	150
0530/US952	70
0643/US944	86
0670/US956	30
0672/US956	52
068L/U23	179
0710/U26	136
0766/U23	173
0810/US10	115
0810SVS/U10	115
099/US952	106
1107/17K	168
1107/267	168
1117/202SP	166
1117/88K/88KS	166
1124/24K/24KS	170
1124/35P/35PS	169
1124/843K/843KS	169
1138/42K/42KS	108
1140/42K/42KS	130
1171/17K/17KS	172
1171/88K/88KS	172
137/42K – 42KS	120
138L/300PI	120
138L/304L	121
138L/42K/42KS	121
139/42K – 42KS	142
1400/42K/42KS	64
1405/42K/42KS	100
1505/42K/42KS	78
1510/42K/42KS	144
1515/42K/42KS	150
1530/42K/42KS	70
1643/52K/52KS	86
1643/US950S (100 Nm)	86
1644/52KV/52KVS	92
1644F/52/52KVS	92
1670/19K/19KS	30
1672/19K/19KS	52
168L/30P/30PS	179
168L/88K/88KS	179
17KS	168
1710/42K/42KS	136
1766/17K/17KS	174
1766/23P/23PS	173
1766/3022P	173
1766/88K/88KS	174
1767/2705	167
1810/273P	114
1810/30P/30PS	117
1810/3346	116
1810/42K/42KS	115
199/42K	106
430	181
4920 – Set 1	250
4920 – Set 2	250
4920 – Set 3	251
4920 – Set 5	251
4921 – Set 1	252
4921 – Set 2	252
4921 – Set 3	253
4921 – Set 5	253
4930 – Set 1	254
4930 – Set 2	254
4930 – Set 3	255
4930 – Set 5	255
5004DR with design-rings	271
5004	270
5010	270
5040	271
5210	272
53H/42K	156
53H/60	156
53S/42K	157
5310	272
5710	273
60L/42K	157
63-75/42K	158

Design no.	Page
84/42K – 84H/42K	158
Architectural hardware column display	305
Counter display	306
Drilling jig	299
E0138/US956	109
E0140/US956	131
E038/US956	123
E0400/US956	65
E0430/US956	138
E0440/US956	48
E050/US956	76
E0643/US944	87
E0800/US956	145
E1138Z/29N/29NS	110
E1138Z/29NR	110
E1138Z/42K/42KS	109
E1138Z/849	111
E1140Z/29N/29NS	132
E1140Z/29NR	132
E1140Z/42K/42KS	131
E1140Z/848	133
E1388Z/17K/17KS	165
E1388Z/23P/23PS	165
E138Z/353FL	122
E138Z/355FL	122
E138Z/42K/42KS	123
E1400Z/42K/42KS	65
E1400Z/848	66
E1401F/42/42KVS	128
E1420Z/42K/42KS	68
E1430Z/29N/29NS	139
E1430Z/29NR	139
E1430Z/42K/42KS	138
E1430Z/848	140
E1433Z/17K/17KS	164
E1440Z/19K/19KS	48
E1440Z/847	49
E1444Z/17K/17KS	180
E1444Z/23P/23PS	180
E150Z/42K/42KS	76
E1555Z/17K/17KS	171
E1555Z/23P/23PS	171
E1643Z/52K/52KS	87
E1643Z/848	88
E1643Z/US950S (100 Nm)	87
E1644F/52/52KVS	93
E1644Z/52KV/52KVS	93
E1644Z/848	94
E1800Z/42K/42KS	145
E484	287
E487	287
E497	287
E50/42	159
E5000	273
E5010	273
E5011	274
E5012	275
E5014	276
E5015	276
E50G/55	160
E5100	277
E5110	277
E5210	277
E5215	278
E5310	278
E5311	279
E5511	279
E5600	280
E5606	280
E58/42	159
E663	288
E664	289
E665	289
E695	286
E847S-SK	19, 39, 49
E848S-SK	66, 88, 90
E848S-SK	94, 97, 104
E848S-SK	133, 140
E849S-SK	45, 74, 83
E849S-SK	111, 153
Expanding spindle	297
F/Ei-Profile spindle	298
FDW-Profile spindle	298
Fixing set for knobs	299

Design no.	Page
Fixing system for pull handle – Type 1	294
Fixing system for pull handle – Type 2	294
Fixing system no. 10 for pull handles	295
Fixing system no. 11 for pull handles	296
Fixing system no. 5 for pull handles	294
Fixing system no. 7 for pull handles	295
Fixing system no. 8 for pull handles	295
FS-E138F/353K	124
FS-E138F/42/42S	124
HCS® A113	222
HCS® A138S	224
HCS® A1530	218
HCS® A1880	212
HCS® A1885	220
HCS® A197S	216
HCS® Clip-in components – aluminium	235
HCS® Clip-in components – brass	236
HCS® Clip-in components – nylon	236
HCS® cylinder	235
HCS® decorative rings	231, 232
HCS® GD A113	223
HCS® GD A138S	225
HCS® GD A1530	219
HCS® GD A1880	213
HCS® GD A1885	221
HCS® GD A197S	217
HCS® GD A760/761	229
HCS® GD A761/762	229
HCS® GD A763	230
HCS® GD A764	230
HCS® GD K138S	228
HCS® K138S	227
HCS® latch sets	232, 233
HCS® M138S	226
HCS® M156S	210
HCS® M1950S	211
HCS® sample block	308
HCS® sample block for glass doors	309
HCS® strike plates	233, 234
Hexagon column display	305
HOPPE Quick-FitPlus sample case	310
HS-0643/419/420	86
HS-M0642/419N/423	102
HS-M0643/419N/423	89
i-Solid profile spindle	298
M029/US937	27, 34
M051/US956	146
M0515/US956	151
M0530/US956	72
M0535/US956	42
M0545/US956	80
M0550/US920	56
M0558/US918	18
M056/US937	22
M0623/US943	96
M0642/US910	103
M0642/US943	102
M0643/US943	89
M0643S/US943 (100 Nm)	89
M072/7	194
M0740/U23	177
M0788/US910	190
M0941/U23	175
M0950/U9	38
M123/15K-2/15KS-2	204
M129/19K/19KS	34
M151/265	146
M151/30P/30PS	147
M151/42K/42KS	147
M1515/23K/23KS	151
M1515/29N/29NS	152
M1515/29NR	152
M1515/849	153
M1530/23K/23KS	72
M1530/29N/29NS	73
M1530/29NR	73
M1530/379	71
M1530/849	74
M1535/265	42
M1535/29N/29NS	44
M1535/29NR	44
M1535/849	45
M1545/23K/23KS	80
M1545/29N/29NS	82

Index – in numerical ascending order by design-number

Design no.	Page
M1545/29NR	82
M1545/30P/30PS	81
M1545/849	83
M1550/21/21S	58
M1550/25K/25KS	56
M1558/18K/18KS	18
M1558/847	19
M156/19K/19KS	22
M1602/18K/18KS	26
M1602/19K/19KS	27
M1603/23K/23KS	126
M1613/300LF	200
M1613/88K-2/88KS-2	200
M1623/843K/843KS	96
M1623/848	97
M1642/42K/42KS	103
M1642/843K/843KS	102
M1642/844P/844PS	102
M1642/848	104
M1643/843K/843KS	89
M1643/848	90
M170/15K-2/15KS-2	202
M172/15K-2/15KS-2	194
M1740/23P/23PS	177
M1740/332P	177
M1740/88K/88KS	178

Design no.	Page
M1788/2788N	190
M1941/332P	175
M1941/88K/88KS	176
M1950/15K/15KS	38
M1950/847	39
M1-M6 sample boards	306
M40H/17K	181
M425	56
M43/843	89
M462 – Set 7	242
M463 – Set 7	243
M471 – Set 7	246
M472 – Set 7	247
M497	288
M515LG/23	269
M516	262
M516/19	262
M517	263
M517/19	263
M5170/19	264
M543	269
M545LG	268
M545LG/23	268
M550LG	265
M553	281
M63/42K	160

Design no.	Page
M695	286
M696	286
M8 HCS® sample board	307
M81H/42	161
M84/42K	161
M855/25HK/25K/25KVS/1550	57
MOL91/42KS (for door safety catch)	290
OL92/42KS (for door safety catch)	290
Profile spindle	297
PSK-M0642/US943	102
PSK-M0643/US943	89
Sample block	309
Sample block – sliding door set	309
Sample board	306, 307
Sample boards with special dimensions	310
Sample case	310
Secustik® sample	308
Solid spindle	296
Spring cassette	299
Star-shaped column	304
Triangular column display	304
Wall display	304
Window handle sample board	307
Window handle sample case	309
Window handle sample with adj. spindle	308

Product overview
(in alphabetical order by series names)

HOPPE®
Handle of excellence.

Product lines		Material *				Interior door handles	HCS® – HOPPE Compact System	Programme for sliding doors	Pull handles
Series name	**Design number**	**A**	**E**	**K**	**M**				
duravert®									
Acapulco	M1558				•	p. 16			
Athinai	M156				•	p. 20	p. 210		p. 262
Bergen	M1602				•	p. 24			
Brisbane	1670	•				p. 28			
Bruxelles	M129				•	p. 32			
Capri	M1950				•	p. 36	p. 211		
Genova	M1535				•	p. 40			
Las Vegas	E1440		•			p. 46			
Melbourne	1672	•				p. 50			
Monte Carlo	M1550				•	p. 54			p. 265
Perth	A1880	•					p. 212		
Ravenna **new**	M1788				•	p. 188			
Singapore	M172				•	p. 192			
Product areas which cover all product lines		•	•	•	•		p. 229, p. 235	p. 240	
duraplus®									
Amsterdam	(E)1400	•	•			p. 63			
Antwerpen	E1420		•			p. 67			
Arles	A197S	•					p. 216		
Atlanta	(M)1530	•			•	p. 69	p. 218		
Bonn	E150		•			p. 75			
Bremen **new**	1505	•				p. 77			
Cannes	M1545				•	p. 79			p. 268
Dallas	(E/M)1643	•	•		•	p. 85			p. 269
Detroit **new**	(E)1644	•	•			p. 91			
Elba	M1613				•	p. 199			
Groningen	A1885	•					p. 220		
Houston	M1623				•	p. 95			
Lecce **new**	1405	•				p. 99			
London	A113	•					p. 222		
Los Angeles **new**	M1642				•	p. 101			
Luxembourg	199	•				p. 105			
Marseille	(E)1138	•	•			p. 107			
New York	1810	•				p. 113			
Paris	(E/K)138	•	•	•		p. 119	p. 224		
Ródos	M1603				•	p. 125			
Rotterdam **new**	E1401		•			p. 127			
Stockholm	(E)1140	•	•			p. 129			
Tôkyô	1710	•				p. 135			
Trondheim	E1430		•			p. 137			
Valencia	M170				•	p. 201			
Vancover	139	•				p. 141			
Verona	1510, E1800, M151	•	•		•	p. 143			
Vitória	(M)1515	•			•	p. 149			p. 269
Wien	M123				•	p. 203			
Product areas which cover all product lines		•	•	•	•	p. 155	p. 229, p. 235	p. 244	p. 270
duranorm®									
Alta **new**	E1433		•			p. 164			
Baden **new**	E1388		•			p. 165			
Birmingham	1117	•				p. 166			
Cadiz	1767	•				p. 167			
Dubayy	1107	•			•	p. 168			
Dublin **new**	1124	•				p. 169			
Essen **new**	E1555		•			p. 171			
Ibiza **new**	1171	•			•	p. 172			
Maribor **new**	1766	•			•	p. 173			
Roissy	M1941				•	p. 175			
Santiago	M1740				•	p. 177			
Seattle **new**	168L	•			•	p. 179			
Utrecht **new**	E1444	•	•			p. 180			
Product areas which cover all product lines		•	•		•	p. 181		p. 248	

* Materials: A = aluminium, E = stainless steel, K = nylon, M = brass

HOPPE®

Handle of excellence.

HOPPE AG · Via Friedrich Hoppe · CH-7537 Müstair
Tel. +41 (0)81 851 66 00 · www.hoppe.com
Fax +41 (0)81 851 66 66 · info.ch@hoppe.com

© HOPPE AG, All rights reserved 09/2014
556649 (2.000, LG)

Finish chart

HOPPE®
Handle of excellence.

Aluminium



F1
Silver



F1-2
Matt silver



F1/F69
Silver/satin stainless steel



F2
Champagne



F33-1
Medium bronze matt



F4
Bronze



F49/F9-2
Polished chrome/ matt steel



F9
Steel



F9-2
Matt steel



F94-1
Satin



F249
Polished chrome finish



F271*
Polished brass finish



F7016
Gris anthracite



F8707
Dark brown semi-gloss



F9005
Jet black



F9010
Pure white



F9016
Traffic white

* Suitable for interior applications only.

Stainless steel



F68
Polished



F69
Satin



F69/F1
Satin/aluminium silver



F77-R
Brass colour – **Resista®**

Nylon



F7016M
Matt anthracite grey



F7022M
Matt umber grey



F7032M
Matt pebble grey



F7037M
Matt dusty grey



F9005M
Matt jet black



F9010M
Matt pure white

Brass



F41
Satin chrome



F41-R
Satin chrome – **Resista®**



F42-R
Satin nickel – **Resista®**



F42-R/F69
Satin nickel/ satin stainless steel



F45-R
Polished/satin chrome – **Resista®**



F46-R
Satin chrome-coloured/ polished – **Resista®**



F49
Polished chrome



F49-R
Polished chrome – **Resista®**



F49/F69
Polished chrome/ satin stainless teel



F49-R/F41-R
Polished chrome/satin chrome – **Resista®**



F49/F9
Polished chrome/ aluminium steel



F49-R/F98-R
Polished chrome/matt chrome – **Resista®**



F52-R/F77-R
Satin/polished brass colour – **Resista®**

F54
Antiqua

F55
Traditional antiqua

F56
Silver antiqua

F65-R
Satin/polished nickel coloured – **Resista®**

F71
Polished

F72
Satin

F73
Antique

F73M-1
Antique matt

F74-R
Satin/polished brass colour – **Resista®**

F75-R
Polished/satin brass colour – **Resista®**

F76
Earth antiqua

F77-R/F52-R
Polished/satin brass colour – **Resista®**

F98-R
Matt chrome – **Resista®**

F77-R
Brass colour – **Resista®**

Core-range

Service-Range

for further information see p. 8

Differences in colours can occur due to the limitations of the printing process.